arXiv:math/0407206v2 [math.GR] 21 Jul 2004

Core and intersection number for group actions on trees.

Vincent Guirardel

February 1, 2008.

Fichier `intersection71.tex`

Abstract

We present the construction of some kind of *convex core* for the product of two actions of a group on $\mathbb{R}$-trees. This geometric construction allows to generalize and unify the intersection number of two curves or of two measured foliations on a surface, Scott's intersection number of splittings, and the apparition of surfaces in Fujiwara-Papasoglu's construction of the JSJ splitting. In particular, this construction allows a topological interpretation of the intersection number analogous to the definition for curves in surfaces. As an application of this construction, we prove that an irreducible automorphism of the free group whose stable and unstable trees are geometric, is actually induced a pseudo-Anosov homeomorphism on a surface.

Consider a surface Σ and two homotopy classes of simple closed curves $c_1, c_2 \subset \Sigma$. Denote by $i(c_1, c_2)$ their geometric intersection number. The nullity of the intersection number is equivalent to the possibility of isotoping the curves apart. In terms of splittings, $i(c_1, c_2) = 0$ if and only if the two splittings of $\pi_1(\Sigma)$ dual to these curves are *compatible* (i. e. have a common refinement).

In [Sco98] (see also [SS00, SS03]) Scott generalized this notion of intersection number to any pair of splittings of a finitely generated group G. This intersection number is always symmetric. Moreover, when edge groups of the splittings are finitely generated then this intersection number is finite, and it vanishes if and only if the two splittings are compatible.

By Bass-Serre theory, two splittings of a group G correspond to two actions of G on simplicial trees T_1, T_2. In this article, we give a geometric construction of a kind of *convex core* for the diagonal action of G on $T_1 \times T_2$ which captures the information about the intersection number of the

corresponding splittings. Because of its geometric nature, this construction works naturally in the context of $\mathbb{R}$-trees. The convexity in question here is not the CAT(0) convexity, which would give a much too large set. The useful notion in this context is *fiberwise convexity*: a subset $E \subset T_1 \times T_2$ has convex fibers if for both $i \in \{1, 2\}$ and every $x \in T_i$, $E \cap p_i^{-1}(x)$ is convex (where $p_i : T_1 \times T_2 \to T_i$ denotes the canonical projection).

Main Theorem. *Let T_1, T_2 be two minimal actions of G on $\mathbb{R}$-trees having non-homothetic length functions, or being irreducible. Assume that T_1 and T_2 are not the refinement of a common simplicial non-trivial action.*

Then there exists a subset $\mathcal{C} \subset T_1 \times T_2$ which is the smallest non-empty closed invariant connected subset of $T_1 \times T_2$ having convex fibers. Moreover, $\mathcal{C}$ is CAT(0) for the induced path-metric, and $T_1 \times T_2$ equivariantly deformation retracts to $\mathcal{C}$.

We call $\mathcal{C}$ the core *of $T_1 \times T_2$.*

By definition, $\mathcal{C}$ is unique, and is thus invariant under automorphisms of the actions T_1 and T_2. Moreover, this construction is symmetric by definition so $\mathcal{C}(T_1 \times T_2)$ is naturally isomorphic to $\mathcal{C}(T_2 \times T_1)$. By contrast, the symmetry of Scott's intersection number is something that needs a proof, and does not readily follow from the definition.

The hypotheses of the main theorem are weak, and we did not give optimal hypotheses for simplicity of the statement (see Proposition 5.1 and Corollary 5.2 for more details). For one-edge splittings, the assumption that T_1 and T_2 are not the refinement of a common simplicial non-trivial action is implied by the requirement that the length functions are distinct. Without those hypotheses, one can still give a definition for $\mathcal{C}$, but two pathologies may occur: $\mathcal{C}$ may be empty, and it may fail to be connected (see sections 3 and 4). There is a remedy to the non-connectedness of $\mathcal{C}$: there is a standard way to enlarge it to a connected invariant set $\hat{\mathcal{C}}$ with convex fibers (see section 4.4).

Theorem 6.1 (compare [SS00]). *Let T_1, T_2 be two minimal actions of G on $\mathbb{R}$-trees, such that $\mathcal{C}(T_1 \times T_2) \neq \emptyset$.*

Then T_1 and T_2 have a common refinement if and only if $\mathcal{C}$ is 1-dimensional.

The proof of this fact is very natural as $\mathcal{C}(T_1 \times T_2)$ itself is a common refinement of T_1 and T_2.

In view of the corollary above, we define the intersection number of two actions of G on $\mathbb{R}$-trees as the covolume of $\mathcal{C}$ (see definition 2.4). For

two actions on simplicial trees with the combinatorial metric, this covolume coincides with the number of orbits of 2-cells in $\mathcal{C}/G$, so the vanishing of the intersection number for splittings is equivalent to the compatibility. Of course, without any hypothesis, the action of G on $\mathcal{C}$ may fail to be discrete, and in this generality, it is not clear how useful this definition of the intersection number can be. Note however that there are intersecting cases when the actions of G on T_1 and T_2 are non-discrete whereas the action of G on $T_1 \times T_2$ is discrete (see the application to automorphisms of free groups in section 9).

Our construction of the core and intersection number generalizes and unifies several notions:

Classical and Scott's intersection number. Our definition of the intersection number coincides with the intersection number of two curves on a surface and with Scott's intersection number of splittings (see example 3 in section 2.2, and section 10). However, contrary to Scott's approach, we do not handle *codimension one immersions* (*almost-invariant sets* in Scott's terminology) since we need to start with actions on trees.

Intersection number of measured foliations. Given two transverse measured foliations $\mathcal{F}_1$, $\mathcal{F}_2$ on a surface Σ, there is a well defined intersection number $i(\mathcal{F}_1, \mathcal{F}_2)$ which is the volume of the singular euclidean metric on Σ defined by the transverse measures of $\mathcal{F}_1$ and $\mathcal{F}_2$. Our intersection number of the actions of $\pi_1(\Sigma)$ on the $\mathbb{R}$-trees T_1, T_2 dual to $\mathcal{F}_1$, $\mathcal{F}_2$ coincides with $i(\mathcal{F}_1, \mathcal{F}_2)$ (see example 4 in section 2.3).

Culler-Levitt-Shalen's core. For two trees dual to transverse measured foliations on a surface as above, the core of $T_1 \times T_2$ is a surface, and it is equivariantly homeomorphic to the universal cover of Σ. In this case, Culler, Levitt and Shalen have characterized this surface as the smallest non-empty, invariant, simply-connected subset of $T_1 \times T_2$ ([CLS]).

Fujiwara-Papasoglu's enclosing groups. In their construction of a JSJ splitting ([FP98]), Fujiwara and Papasoglu produce a surface in the product of two simplicial trees which essentially coincides with our core (Prop. 12.1). In a more general setting, their construction is not symmetric in T_1 and T_2 and produces an *asymmetric core* (see section 11 for a definition).

In general this asymmetric core is closely related to Scott and Swarup's (asymmetric) *strong intersection numbers*: Corollary 11.4 gives an interpretation of the strong intersection number as the number of orbits of two cells in the asymmetric core (see Corollary 11.4).

A first application of our construction is a topological interpretation of

the intersection number as the minimum number of connected components of the intersection of subcomplexes representing the splitting:

Theorem 7.1. *Assume that $Y_1, Y_2 \subset X$ are two 2-sided subcomplexes, which intersect transversely, and let T_1, T_2 be the two dual trees, endowed with the action of $\pi_1(X)$. Then $i(T_1, T_2) \leq \#\pi_0(Y_1 \cap Y_2)$.*

Moreover, given two non-trivial actions of a group on simplicial trees T_1, T_2, there exists a complex X and $Y_1, Y_2 \subset X$ two 2-sided subcomplexes intersecting transversely such that $i(T_1, T_2) = \#\pi_0(Y_1 \cap Y_2)$.

The intersection number of two simple closed curves on a surface X can be achieved without changing the ambient space X. In [FHS83, Th. 6.7], this result was extended to splittings dual to tori or Klein bottles in a 3-manifold by showing that for least area representants of these submanifolds, the intersection number of the two induced splittings equals the number of curves in their intersection. However, in general, one may need to change the ambient space to achieve the intersection number.

A natural question about the core is its cocompactness. In [Sco98], Scott proves that the intersection number of two splittings of a finitely generated group over finitely generated groups have a finite intersection number. However, there are examples of splittings of a finitely presented group (a free group) over non-finitely generated groups having an infinite intersection number (see Lemma 8.4). In terms of group actions on $\mathbb{R}$-trees, the finite generation of edge groups of a graph of groups means that the corresponding Bass-Serre action is *geometric*, i. e. dual to a measured foliation on a finite 2-complex (see [LP97]). In this setting, we get the following finiteness result:

Theorem 8.1. *Let T_1, T_2 be geometric actions of a finitely generated group G on $\mathbb{R}$-trees.*

Then there is a set $D \subset T_1 \times T_2$, which is a finite union of compact rectangles, and such that $\mathcal{C}(T_1 \times T_2) \subset \overline{G.D}$.

This does not imply the cocompactness in general because we need to take the closure of $G.D$. However, if T_1 and T_2 are simplicial trees, $G.D$ is automatically closed, so we get that the core is cocompact and that $i(T_1, T_2)$ is finite (Corollary 8.2). We also can deduce the finiteness of the intersection number of two geometric actions when G is finitely presented (Prop. 8.3).

Finally, we give an application for automorphisms of a free group. This result is proved by showing that the core of the product of the stable and unstable trees is almost a surface.

Corollary 9.3. *Assume that $\alpha \in \mathrm{Out}(F_n)$ is irreducible with irreducible powers. Let T_1, T_2 be the stable and unstable actions of F_n on $\mathbb{R}$-trees corresponding to α.*

If T_1 and T_2 are both geometric, then α is induced by a pseudo-anosov homeomorphism of a surface with boundary.

The paper is organized as follows. Section 1 is devoted to basic definitions and preliminaries. Then we give the general definition of the core $\mathcal{C}$ in section 2. In section 3, we study the cases where $\mathcal{C}$ is empty, and we give necessary and sufficient condition characterizing the emptiness of $\mathcal{C}$. In section 4, we prove that the core is contractible whenever it is connected, and we prove that it is connected whenever T_1 and T_2 are not the refinement of a common non-trivial action on a simplicial tree. Moreover, when $\mathcal{C}$ is not connected, we show a standard way to enlarge it to get an invariant contractible set $\hat{\mathcal{C}}$ with convex fibers. We also prove the CAT(0) property at the end of this section. In section 5, we prove the characterization of the core as the smallest connected non-empty closed invariant subset with convex fibers. In section 6, we prove that the non-vanishing of the intersection number is essentially the only obstruction to the compatibility of two splittings. We give our topological interpretation of the intersection of two splittings in section 7. In section 8, we prove our finiteness result for the core of geometric actions. We prove our application to automorphisms of free groups in section 9. We discuss the equality of our intersection number with Scott's in section 10. In section 11, we introduce an asymmetric core and relate it to Scott and Swarup's strong intersection number. Finally in section 12, we relate the core with Fujiwara and Papasoglu's construction of enclosing groups.

This paper was much inspired by Scott and Swarup's papers on the intersection number [Sco98, SS00]. The construction of the core followed from an attempt of a more geometric interpretation of their definitions.

Contents

1 Definitions and preliminaries **6**

2 The main definition and examples **10**

3 When is the core empty ? **15**

4 Contractibility of the core **18**

5 Characterization of the core **31**

6 Compatibility of tree actions **35**

7 Topological interpretation of the intersection number **36**

8 Core of geometric actions **38**

9 Application to automorphisms of free groups **47**

10 Equality with Scott and Swarup's intersection number **54**

11 Strong intersection number and asymmetric core **56**

12 Fujiwara and Papasoglu's enclosing groups **58**

1 Definitions and preliminaries

1.1 Basic vocabulary

An $\mathbb{R}$-tree T is a metric space in which any two points are connected by a unique topological arc, and such that this arc is actually a geodesic. Equivalently, an $\mathbb{R}$-tree is a geodesic metric space which does not contain any embedded topological circle. The geodesic joining two points a, b is denoted by $[a, b]$. In an $\mathbb{R}$-tree, a subset is connected if and only if it is convex; in this case, we say that this subset is a subtree.

Consider an $\mathbb{R}$-tree T. A *direction* at a point $x \in T$ is a connected component of $T \setminus x$. Note that y, z are in the same direction at x if and only if $[x, y] \cap [x, z]$ is not reduced to $\{x\}$. In particular, the set of directions at x corresponds to the set of germs of isometric maps from $[0, \varepsilon]$ to T sending 0 to x. A *branch point* in T is a point at which there are at least 3 directions. The metric completion $\hat{T}$ of an $\mathbb{R}$-tree T is still an $\mathbb{R}$-tree. However, one usually does not work with complete $\mathbb{R}$-trees because it is often prefered to have minimality assumptions (see below): Points of $\hat{T} \setminus T$ are terminal points of $\hat{T}$ in the sense that there is exactly one direction based at such a point.

A ray of T is an isometric embedding of $\mathbb{R}_+$ into T. An *end* of T is an equivalence class of rays under the relation of having finite Hausdorff distance. If S is a subtree of T, we will denote by $\partial_\infty S \subset \partial_\infty T$ the set of ends of S.

All actions of groups on $\mathbb{R}$-trees we consider are actions by isometries. A group G acting of T is *elliptic* if it fixes a point in T. We say that an action of a group G on an $\mathbb{R}$-tree T is *trivial* if every element of G is elliptic. This terminology is not really standard as the usual convention is that the action of G is trivial if G is elliptic. However, when G is finitely generated, G is elliptic if and only if the action of G is trivial. In general, if the action of G is trivial but not elliptic, then G fixes a point of the completion of T, or an end of T.

A group action on an $\mathbb{R}$-tree $G \circlearrowright T$ is *minimal* if it has no proper invariant subtree. When the action is non-trivial, there is a unique minimal nonempty G-invariant subtree of T, and this subtree is the union of translation axes of hyperbolic elements of G. We denote this minimal subtree by $\mathrm{Min}_T(G)$.

We will denote by $\mathrm{Axis}_T(h)$ the axis of a hyperbolic isometry h in T. A *positive* semi-axis of h is a semi-line $A \subset Axis(h)$ such that $h.A \subset A$. If h is a hyperbolic isometry of T, we will denote by $\omega_T(h)$ the endpoint of T defined by any *positive* semi-axis A of h.

We denote by $l_T(g) = \min\{d(x, g.x) | x \in T\}$ the translation length of an element $g \in G$. The action is called *abelian* if there is a morphism $\varphi : G \to \mathbb{R}$ such that $l_T(g) = |\varphi(g)|$. An action is abelian if and only if there is a end of T fixed by G. The action is *dihedral* if T contains an invariant line, and some element acts as a reflection on this line. The action is *irreducible* if it not abelian, and not dihedral. Equivalently, the action is irreducible if and only if there are two hyperbolic elements whose axes have a compact (or empty) intersection.

A *morphism of* $\mathbb{R}$*-trees* $f : T \to T'$ is a 1-Lipschitz map such that for each arc $I \subset T$, there is a subdivision of I into finitely many sub-intervals on which f is isometric.

A map *preserving alignement* is a continuous map $f : T \to T'$ such that $x \in [y, z]$ implies $f(x) \in [f(y), f(z)]$.

Lemma 1.1. *Consider a continous map $f : T \to T'$. Then following are equivalent*

1. *f preserves alignment*
2. *the preimage of every convex set is convex.*
3. *for all $x' \in T'$, $f^{-1}(x')$ is connected*

Proof. Clearly, 1 implies 2 which implies 3. Now assume that 3 holds. Let $x \in [y, z]$, and assume that $f(x) \notin [f(y), f(z)]$. Let $y' \in [y, x]$ by the point closest to x such that $f(y') = f(x)$, and define $z' \in [z, x]$ similarly. One

has $y', z' \in f^{-1}(f(x))$ and $x \notin f^{-1}(f(x))$ contradicting the connexity of $f^{-1}(f(x))$. $\square$

The following notion of refinement generalizes the notion of refinement of a splitting to $\mathbb{R}$-trees.

Definition 1.2 (Refinement). *Consider two actions of G on $\mathbb{R}$-trees T and T'. Then one says that T is a refinement of T' if there exists an equivariant map preserving alignment from T onto T'.*

1.2 Technical minimality statements

In what follows, given $A \subset G$, $\langle A \rangle$ denotes the group generated by A.

Lemma 1.3. *Consider an action of a group G on an $\mathbb{R}$-tree T, and a finitely generated semigroup $S \subset G$ acting non trivially on T such that the minimal subtree invariant by $\langle S \rangle$ is not a line. Let I be an arc contained in the axis of a hyperbolic element $h \in S$.*

Then there exists a finitely generated semigroup $S' \subset S$ such that

- $\langle S' \rangle = \langle S \rangle$
- *every element $g \in S' \setminus \{1\}$ is hyperbolic in T, its axis contains I, and g translates in the same direction as h on I.*

Corollary 1.4. *Let T_1, T_2 be two non-trivial actions of a group G on $\mathbb{R}$-trees. Assume that the minimal subtree of T_1 is dense in T_1.*

Then for each direction δ_1 in T_1, there exists an element h which is hyperbolic in both T_1 and T_2, and having a positive semi-axis in T_1 contained in δ_1.

Proof of Corollary 1.4. First assume that T_1 contains an invariant line, which implies that T_1 itself is a line, and that δ_1 is a semi-line. Then G has a subgroup G_0 of index at most 2 consisting of elements hyperbolic in T_1. If every element of G_0 is elliptic in T_2, then the action of G on T_2 is trivial, a contradiction. Take $h \in G_0$ which is hyperbolic in T_2, and h or h^{-1} satisfies the conclusion of the corollary.

Now assume that T_1 contains no invariant line. By density, δ_1 intersects the minimal subtree of T_1. Let I_1 be a non-degenerate arc contained in the intersection of δ_1 with the translation axis of a hyperbolic element of $h \in G$. Remember that $\omega_{T_1}(h) \in \partial_\infty T_1$ denotes the endpoint of a positive semiaxis of h in T_1. Up to changing h to h^{-1} we can assume that $\omega_{T_1}(h) \in \partial_\infty \delta_1$. Since T_1 contains no invariant line, there exists an element h' whose axis is

distinct from the axis of h. Take h_2, h_2' two elements which are hyperbolic in T_2 and having disting axes in T_2.

Apply Lemma 1.3 in T_1 to $S = \langle h, h', h_2, h_2' \rangle$, I and h, to get a semigroup S' such that $\langle S' \rangle = S$ and whose elements are hyperbolic in T_1, whose axes contain I and which translate in the same direction as h on I. This implies that for every $g \in S'$, $\omega_{T_1}(g) \in \partial_\infty(\delta_1)$. Since $\langle S' \rangle = \langle S \rangle$, Serre Lemma implies that S' cannot consist only of elements which are elliptic in T_2. Now any $g \in S'$ which is hyperbolic in T_2 satisfies the conclusion of the corollary. □

Proof of lemma 1.3. Let A be a finite generating set of S containing the hyperbolic element h. We apply some transformations on A so that at each step, the semigroup generated by A decreases, but the group generated by A remains constant.

Step 1: replacing A by hyperbolic elements. We want to replace A by a set where all elements are hyperbolic. We leave the proof of the following easy fact to the reader (the case where the intersection is empty is proved in [Chi01, Lem. 3.2.2]):

Fact 1.5. *Let a, b be two isometries of an $\mathbb{R}$-tree T, with b hyperbolic, and a elliptic. If $\operatorname{Fix} a \cap \operatorname{Axis}(b)$ is either empty or not reduced to a point, then ab is hyperbolic.*

Thus, if $a \in A$ is elliptic, and if $\operatorname{Fix} a \cap \operatorname{Axis}(b)$ is either empty or not reduced to one point for some hyperbolic $b \in A$, we may replace a by ab in A.

If $\operatorname{Fix} a \cap \operatorname{Axis}(b) = \{O\}$, this is more delicate.

Case 1: $a.\operatorname{Axis}(b) \neq \operatorname{Axis}(b)$.

- **Subcase 1.a:** $a.\omega_T(b) \neq \omega_T(b^{-1})$. In this case, one easily checks that $b^k a$ is hyperbolic for large enough $k \geq 0$, so we can replace a by $b^k a$ in A.
- **Subcase 1.b:** $a.\omega_T(b) = \omega_T(b^{-1})$. In this case, $a.\omega_T(b^{-1}) \neq \omega_T(b)$ since $a.\operatorname{Axis}(b) \neq \operatorname{Axis}(b)$. This means that the period of $\omega_T(b)$ under the action of a is at least 3 (it may be infinite), so in particular, $a^2.\omega_T(b) \neq \omega_T(b^{-1})$ and $a^3.\omega_T(b) \neq \omega_T(b^{-1})$. Thus, one can replace a by $\{a^2, a^3\}$ in A, and we are done since a^2 and a^3 either fall in subcase 1.a or fix a semi-axis of b in which case the fact 1.5 above applies.

Case 2: for every elliptic element $a \in A$ and every hyperbolic element $b \in A$ one has $a.\mathrm{Axis}(b) = \mathrm{Axis}(b)$. Note that all the hyperbolic elements of A cannot have the same axis since otherwise this axis would be S-invariant. So consider $b, b' \in A$ having distinct axes. Then both $b^k a$ and ab^k act as reflections on $\mathrm{Axis}(b)$ for all k, and as k tends to $+\infty$, their fix points converge respectively to $\omega_T(b)$ and $\omega_T(b^{-1})$. Thus, one of those fix points is not on the axis of b' for some k. Therefore, using fact 1.5 above, at least one of the two elements $b'(b^k a)$, $b'(ab^k)$ is hyperbolic, and we can replace a by this element.

Step 2: replacing A by a coherent set of hyperbolic elements. We now aim to change A so that the axis of each element $a \in A$ contains I, and so that a translates in the same direction as h. The lemma will follow since if g_1, g_2 satisfy this property, then so does $g_1 g_2$.

Essentially, we are going to change $a \in A$ to some element of the form $h^k a h^k$ for some large positive k. The result directly follows from the following fact if no element $a \in A$ sends $\omega_T(h)$ to $\omega_T(h^{-1})$. If this occured, then neither a^2 nor a^3 would fall in this case, and one could apply the fact after replacing a by $\{a^2, a^3\}$ in A. □

Fact. *Let h, a be hyperbolic elements such that $a.\omega_T(h) \neq \omega_T(h^{-1})$. Let I be a compact interval in* $\mathrm{Axis}(h)$.

Then for all large enough $k \geq 0$, $h^k a h^k$ is hyperbolic, its axis contains I, and it translates in the same direction as h.

Proof of the fact. Of course, the fact is clear if a and h have the same axis. If a fixes $\omega_T(h)$, then for any given $p \in \mathrm{Axis}(h)$, $h^k.p$, $ah^k.p$, and $h^k a h^k.p$ are in $\mathrm{Axis}(h)$ for k large enough, and the fact follows easily (see figure 1).

Otherwise, the hypothesis means that if p is far enough on the positive semiaxis of h, then $a.h \notin \mathrm{Axis}(h)$. Figure 1 shows why the result holds in this case. □

2 The main definition and examples

2.1 Light quadrants and the core

A *direction* based at a point $x \in T$ is a connected component of $T \setminus x$. A *quadrant* in $T_1 \times T_2$ is the product $\delta_1 \times \delta_2$ of two directions $\delta_1 \subset T_1$ and $\delta_2 \subset T_2$. We say that the quadrant is based at (x_1, x_2) where x_i is the base point of δ_i.

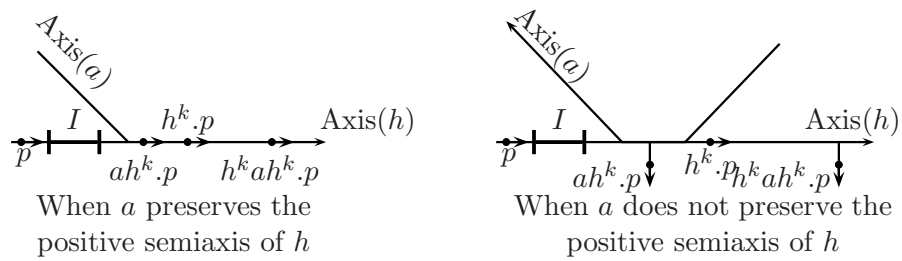

Figure 1: Making axes meet coherently

Consider two actions of a finitely generated group G on $\mathbb{R}$-trees T_1, T_2. We choose a base point $* = (*_1, *_2) \in T_1 \times T_2$.

Definition (Heavy quadrant). *Consider a quadrant $Q = \delta_1 \times \delta_2 \subset T_1 \times T_2$. We say that Q is* heavy *if there exists a sequence $\gamma_k \in G$ so that*

- $\gamma_k.* \in Q$
- $d(\gamma_k.*_1, *_1) \xrightarrow{k\to\infty} \infty$ *and* $d(\gamma_k.*_2, *_2) \xrightarrow{k\to\infty} \infty$

Otherwise, we say that Q is light.

Remark. This definition does not depend on the choice of the base point. In particular, if δ_1 is a direction which does not meet the minimal subtree of T_1 then for any direction δ_2, $\delta_1 \times \delta_2$ is light: choose the first base point in the minimal subtree of T_1.

The core of $T_1 \times T_2$ is what remains when one has removed the light part. Here is a more precise definition.

Definition 2.1. *The* core $\mathcal{C}$ *of $T_1 \times T_2$ is the subset*

$$\mathcal{C} = T_1 \times T_2 \setminus \left[\bigcup_{Q \text{ light quadrant}} Q \right].$$

Equivalently,

$$\mathcal{C} = \bigcap_{Q=\delta_1\times\delta_2 \text{ light quadrant}} (\delta_1^* \times T_2 \cup T_1 \times {\delta_2}^*).$$

If there is some ambiguity, we write $\mathcal{C}(T_1 \times T_2)$ for $\mathcal{C}$.

The definition of light quadrant might seem a little bit arbitrary. Here are two other definitions which actually are equivalent under the weak assumption that $\mathcal{C}$ is non-empty (see Remark 2.3 below and Corollary 3.8).

Definition 2.2 (Other kinds of heavy quadrants).

- *A quadrant Q is* weakly heavy *if every orbit in $T_1 \times T_2$ meets Q.*
- *A quadrant $Q = \delta_1 \times \delta_2$ is* made heavy by a hyperbolic element *if there is an element $h \in G$ which is hyperbolic in T_1 and T_2, and such that for both $i \in \{1, 2\}$, $\omega_{T_i}(h) \in \partial_\infty \delta_i$.*

Remark 2.3. Clearly, a quadrant made heavy by a hyperbolic element is heavy, and a heavy quadrant is weakly heavy. If $\mathcal{C}$ is non-empty, it follows conversely that any weakly heavy quadrant is heavy. Indeed, assume that Q is weakly heavy, and let $x \in \mathcal{C}$. Let $g \in G$ such that $g.x \in Q$. If Q was not heavy, then $g.x$ would not lie in $\mathcal{C}$, a contradiction.

2.2 Examples

Example 1: $T_1 = T_2 = T$, the action of G on T is minimal, and the set of branch points is dense. A quadrant $Q = \delta_1 \times \delta_2$ is light if and only if $\delta_1 \cap \delta_2 = \emptyset$. Indeed, if $\delta_1 \cap \delta_2$ is empty, then Q is light since it does not meet the orbit of any point on the diagonal. To prove the converse, assume that $\delta_1 \cap \delta_2 \neq \emptyset$. Since branch points are dense in T, the minimality of the action implies there exists a hyperbolic element $h \in G$ whose axis intersects $\delta_1 \cap \delta_2$ in at least a semi-line, and one of the elements h or h^{-1} makes Q heavy. It follows that $\mathcal{C}(T \times T)$ is the diagonal of $T \times T$.

Example 2: $T_1 = T_2 = T$ is a simplicial tree with no valence 2 vertex, and the action of G on T is minimal. The argument above extends to prove that a quadrant $\delta_1 \times \delta_2$ is light if and only if $\delta_1 \cap \delta_2$ is contained in an edge. It follows that $\mathcal{C}(T \times T) = \{(v, v) | v \text{ vertex in } T\}$. This examples illustrates the typical situation where $\mathcal{C}$ is disconnected (see section 4 for more details).

Example 3: T_1 and T_2 are dual to two non-parallel simple closed curves on a surface. Denote by Σ a closed hyperbolic surface, and let c_1, c_2 be two distinct simple closed geodesics. For $i \in \{1, 2\}$, the tree T_i dual to c_i can be defined as follows: let $p : \tilde{\Sigma} \to \Sigma$ the universal cover of Σ; the vertices of T_i are the connected components of $\tilde{\Sigma} \setminus p^{-1}(c_i)$ and its edges are the connected components of $p^{-1}(c_i)$. The action of $G = \pi_1(\Sigma)$ by deck transformations on $\tilde{\Sigma}$ gives a action of G on T_i.

We define an equivariant map $f_i : \tilde{\Sigma} \to T_i$ as follows: Choose a small open tubular neighbourhood $A_i \simeq c_i \times]-\varepsilon, \varepsilon[$ of c_i foliated by curves parallel to c_i. This can be done so that the two foliations of the annuli are transverse

on $A_1 \cap A_2$. Let $\tilde{A}_i = p^{-1}(A_i)$, and define f_i so that it sends a component of $\tilde{A}_i$ to the corresponding open edge of T_i, and it sends a component of $\tilde{\Sigma} \setminus \tilde{A}_i$ to the corresponding vertex. Given a direction δ in T_i, $f_i^{-1}(\delta)$ is at bounded Hausdorff distance from open half-plane U_δ in $\tilde{\Sigma}$ bounded by a geodesic in $p^{-1}(c_i)$.

Consider the map $F = (f_1, f_2) : \tilde{\Sigma} \to T_1 \times T_2$. We are going to prove that $\mathcal{C} = F(\tilde{\Sigma})$. This will clearly follow from the fact that for any quadrant $Q = \delta_1 \times \delta_2$ in $T_1 \times T_2$, Q is light if and only if $f_1^{-1}(\delta_1) \cap f_2^{-1}(\delta_2) = \emptyset$. It is clear that if $f_1^{-1}(\delta_1) \cap f_2^{-1}(\delta_2) = \emptyset$, then Q is light since for each point $* \in \tilde{\Sigma}$, the orbit of $(f_1(*), f_2(*))$ doesn't intersect Q. Conversely, if $f_1^{-1}(\delta_1)$ intersects $f_2^{-1}(\delta_2)$, then U_{δ_1} and U_{δ_2} do intersect, and there exists a element $h \in G$ whose axis in $\tilde{\Sigma}$ intersects the geodesics bounding U_{δ_1} and U_{δ_2}. It is then clear that h is hyperbolic in both T_1 and T_2 and that h makes Q heavy.

It follows that F induces a bijection between the 2-cells of $\mathcal{C}$ and the points of $p^{-1}(c_1) \cap p^{-1}(c_2)$. In other words, the number of two-cells of $\mathcal{C}/G$ coincides with the intersection number $i(c_1, c_2)$.

This observation leads to the following definition of the intersection number:

2.3 Intersection number

Definition 2.4. *Let T_1, T_2 be two $\mathbb{R}$-trees endowed with an action of a finitely generated group G. We define the* intersection number $i(T_1, T_2)$ *as the co-volume of the action of G on $\mathcal{C}(T_1 \times T_2)$ for the product measure on $T_1 \times T_2$.*

When T_1 and T_2 are simplicial trees with edges of length 1, then $i(T_1, T_2)$ is the number of 2-cells in $\mathcal{C}/G$.

Let's be more precise about this co-volume. We say that $E \subset T_1 \times T_2$ is measurable if for every finite subtrees[1] $K_1 \subset T_1$ and $K_2 \subset T_2$, $E \cap I_1 \times I_2$ is a borel set in $K_1 \times K_2$. We denote by μ_{K_1,K_2} the product of the Lebesgue measures on K_1 and K_2. If $E \subset T_1 \times T_2$ is measurable, we define

$$\mu(E) = \sup_{K_1,K_2} \mu_{K_1,K_2}(E \cap (K_1 \times K_2)).$$

Note that a compact set may have infinite volume.

The co-volume of a measurable invariant set $\mathcal{C}$ is then

$$\inf \Big\{ \mu(E) \mid G.E \supset \mathcal{C},\ E \text{ measurable} \Big\}$$

[1] a finite subtree is the convex hull of finitely many points.

Example 4: trees dual to two transverse measured foliations on a surface. Given $\mathcal{F}_1, \mathcal{F}_2$ two transverse measured foliations on a closed surface Σ, one can define two $\mathbb{R}$-trees T_i dual to $\mathcal{F}_i$ by lifting $\mathcal{F}_i$ to the universal covering $\tilde{\Sigma}$ of Σ, and taking T_i the space of leaves of $\tilde{\mathcal{F}}_i$, endowed with the metric given by integration of the transverse measure. The action of $G = \pi_1(\Sigma)$ on $\tilde{\Sigma}$ provides an isometric action of G on T_1 and T_2. Denote by $f_i : \tilde{\Sigma} \to T_i$ the canonical projection, and consider $F = (f_1, f_2) : \tilde{\Sigma} \to T_1 \times T_2$. The argument of Example 3 above extends easily to this situation, so we get that $\mathcal{C}(T_1 \times T_2) = F(\tilde{\Sigma})$. In particular, $\mathcal{C}/G$ is isometric to Σ endowed with the singular euclidean metric defined by $\mathcal{F}_1$ and $\mathcal{F}_2$. Since the intersection number of $\mathcal{F}_1$ and $\mathcal{F}_2$ is the volume of this singular metric, we get that $i(\mathcal{F}_1, \mathcal{F}_2) = i(T_1, T_2)$.

2.4 Basic properties of the core

Definition 2.5 (Convex fibers). *Say that a subset $C \subset T_1 \times T_2$ has* convex fibers *(or* connected fibers*) if for all $i \in \{1, 2\}$ and all $x \in T_i$, $p_i^{-1}(x) \cap C$ is convex (maybe empty).*

The following properties of the core are easy:

Proposition 2.6. *Let T_1, T_2 bet two $\mathbb{R}$-trees with a non-trivial action of G, and let $\mathcal{C}$ be the core of $T_1 \times T_2$. Then*

- *$\mathcal{C}$ is closed*
- *$\mathcal{C}$ has convex fibers*
- *$\mathcal{C} \subset \overline{\mathrm{Min}_{T_1}(G)} \times \overline{\mathrm{Min}_{T_2}(G)}$*
- *if both T_1 and T_2 are simplicial, then $\mathcal{C}$ is a subcomplex of $T_1 \times T_2$*

Remark. If $T_i' \subset T_i$ is the minimal subtree of T_i, then $\mathcal{C} \subset \overline{T}_1' \times \overline{T}_2'$

Proof. The core is closed by definition. To prove that the fibers of $\mathcal{C}$ are convex, just check that the fibers of the complement of a quadrant are convex, and use the fact that an intersection of convex sets is convex.

For the third point, assume for instance that $x_1 \notin \overline{\mathrm{Min}_{T_1}(G)}$. Then there is a direction δ_1 containing x_1 and not intersecting $\mathrm{Min}_{T_i}(G)$. Any quadrant of the form $\delta_1 \times \delta_2$ is therefore light since it does not meet the orbit of a base point $(*_1, *_2)$ with $*_1 \in \mathrm{Min}_{T_1}(G)$.

Finally, assume that T_1 and T_2 are simplicial trees. Let Q be a quadrant, and let $\hat{Q}$ be the union of open cells of $T_1 \times T_2$ having a non-empty intersection with Q. One easily checks that $\hat{Q}$ is a quadrant, that $T_1 \times T_2 \setminus \hat{Q}$ is a subcomplex of $T_1 \times T_2$ (it is the product of two directions based at vertices

of the trees), and since $\hat{Q}$ is contained in a bounded neighbourhood of Q, $\hat{Q}$ is light if and only if Q is light. $\square$

3 When is the core empty ?

Proposition 3.1. *Let T_1, T_2 be two non-trivial actions of a finitely generated group G. Then $\mathcal{C}$ is empty if and only if T_1 and T_2 have homothetic length functions, and*

- *either T_1 (and therefore T_2) are dihedral*
- *or there are two ends ω_1 and ω_2 in T_1 and T_2 respectively, which are fixed by G, and such that h translates towards ω_1 in T_1 if and only if h^{-1} translates towards ω_2 in T_2.*

In particular, if T_1 or T_2 is irreducible, then $\mathcal{C}$ is non-empty.

Remark. A particular example of the second case is when T_1 or T_2 is a line, and T_1 and T_2 have homothetic length functions.

If T_1 and T_2 are geometric (i. e. if edge stabilizers are finitely generated in the simplicial case) then the second case can only occur if T_1 and T_2 are both lines on which G acts by translation (see penultimate corollary in [Lev94]). In particular, if T_1 and T_2 are geometric and if $\mathcal{C}(T_1 \times T_2) = \emptyset$, then there is an equivariant homothety between T_1 and T_2.

We will use the two following criteria:

Criterion 3.2. *Assume that $a, b, c \in G$ are hyperbolic in both T_1 and T_2, and that for both $i \in \{1, 2\}$, the three endpoints $\omega_{T_i}(a), \omega_{T_i}(b)$ and $\omega_{T_i}(c)$ are pairwise distinct.*

Let x_i be the center of the triangle $\{\omega_{T_i}(a),\ \omega_{T_i}(b),\ \omega_{T_i}(c)\}$. Then any quadrant containing the point $x = (x_1, x_2)$ is made heavy by a hyperbolic element.

Proof. Consider a quadrant $\delta_1 \times \delta_2$ containing x. Since the complement δ_i^* of δ_i is convex, $\partial_\infty \delta_i$ must contain at least two of the three endpoints $\{\omega_{T_i}(a), \omega_{T_i}(b), \omega_{T_i}(c)\}$ since otherwise, δ_i^* would contain x_i. Thus, there is an element $\gamma \in \{a, b, c\}$ such that for both $i \in \{1, 2\}$, $\omega_{T_i}(\gamma) \in \partial_\infty \delta_i$. Therefore, γ makes $\delta_1 \times \delta_2$ heavy. $\square$

Criterion 3.3. *Assume that there exist $a, b \in G$ which are hyperbolic in both T_1 and T_2, such that one of the two following hypotheses hold:*

1. *either the axes of a and b in some T_i intersect in at most one point*
2. *or the axes of a and b in both trees intersect in more than one point and*
   - *a and b translate in the same direction in T_1*
   - *a and b translate in opposite directions in T_2;*

Then there is a point $x \in T_1 \times T_2$ such that any quadrant containing x is made heavy by a hyperbolic element.

Proof. Consider the point $x = (x_1, x_2)$ defined as follows: if $\mathrm{Axis}_{T_i}(a) \cap \mathrm{Axis}_{T_i}(b) \neq \emptyset$, choose x_i in this intersection, and otherwise, take x_i the projection of $\mathrm{Axis}_{T_i}(b)$ on $\mathrm{Axis}_{T_i}(a)$. Let $E(\delta_i) = \{\gamma \in \{a, b, a^{-1}, b^{-1}\} | \omega_{T_i}(\gamma) \in \partial_\infty \delta_i\}$. We are going to prove that for all quadrant $Q = \delta_1 \times \delta_2$ containing x, $E(\delta_1) \cap E(\delta_2) \neq \emptyset$. It will follow that Q is made heavy by an element in $E(\delta_1) \cap E(\delta_2)$, which will conclude the proof of the criterion.

For any direction δ_i containing x_i, the choice of x_i implies that if $\mathrm{Axis}_{T_i}(a) \cap \mathrm{Axis}_{T_i}(b)$ is reduced to a point, then $E(\delta_i)$ contains three elements. If $\mathrm{Axis}_{T_i}(a) \cap \mathrm{Axis}_{T_i}(b) = \emptyset$, $E(\delta_i)$ contains either $\{a, a^{-1}\}$, $\{a, b, b^{-1}\}$ or $\{a^{-1}, b, b^{-1}\}$. If $\mathrm{Axis}_{T_i}(a) \cap \mathrm{Axis}_{T_i}(b) \neq \emptyset$ and if a and b translate in the same direction, then $E(\delta_i)$ contains either $\{a, b\}$ or $\{a^{-1}, b^{-1}\}$. If $\mathrm{Axis}_{T_i}(a) \cap \mathrm{Axis}_{T_i}(b) \neq \emptyset$ and if a and b translate in opposite directions, then $E(\delta_i)$ contains either $\{a, b^{-1}\}$ or $\{a^{-1}, b\}$.

Now the criterion follows easily: since $\#E(T_i) \geq 2$, the only possibility allowing $E(T_1) \cap E(T_2) = \emptyset$ is that $E(T_1)$ and $E(T_2)$ both have two elements and are the complement of each other. This can only occur if the axes of a and b have a non-degenerate intersection in T_1 and T_2. But the hypothesis on the direction of translations prevents $E(T_1) \cap E(T_2)$ from being empty. □

Proof of Proposition 3.1. Let's first prove the direct implication. We are going to exhibit a point $x \in \mathcal{C}$ such that every quadrant containing x is heavy. This will imply that $x \in \mathcal{C}$ so $\mathcal{C} \neq \emptyset$.

Fact 3.4. *Assume that T_1 is irreducible. Then there is a point $x \in T_1 \times T_2$ such that every quadrant containing x is made heavy by a hyperbolic element.*

Proof. If T_1 is irreducible (T_1 is not a line and has no fix end), then one can find $a, b \in G$ which are hyperbolic in T_1 and whose axes don't intersect. If a and b are hyperbolic in T_2, Criterion 3.3 implies that $\mathcal{C} \neq \emptyset$. Otherwise, by Corollary 1.4 one can find and element h which is hyperbolic both in T_1 and T_2. Now it is easy to check that there are two conjugates of h by powers of a or b whose axes are disjoint in T_1: let p be the midpoint of the bridge

joining $\mathrm{Axis}_{T_1}(a)$ to $\mathrm{Axis}_{T_1}(b)$, and let δ_a and δ_b be the directions based at p containg the axis of a and b respectively; there are at most two integers k such that $a^k.\mathrm{Axis}(h) \not\subset \delta_a$ (resp. such that $b^k.\mathrm{Axis}(h) \not\subset \delta_b$). Thus Criterion 3.3 applies to a pair $a^k h a^{-k}$, $b^{k'} h b^{-k'}$. □

Fact 3.5. *Assume that T_1 and T_2 are reducible (i. e. are dihedral or abelian), and that the length functions l_1 and l_2 of T_1 and T_2 are not homothetic.*

Then there is a point $x \in T_1 \times T_2$ such that every quadrant containing x is made heavy by a hyperbolic element.

Proof. We restrict to a subgroup G' of G of index at most 4 so that T_1 and T_2 have a fixed end (we thus get two abelian actions). Since a translation length satisfies $l(g^2) = 2l(g)$, the length functions restricted to G' are not homothetic. The length function l_i on G' is the absolute value of a group morphism $\varphi_i : G' \to \mathbb{R}$. Note that two elements a, b translate in the same direction in T_i if and only if $\varphi_i(a)$ and $\varphi_i(b)$ have the same sign. Since l_1 and l_2 are not homothetic, consider $g, h \in G'$ such that $|\frac{\varphi_1(g)}{\varphi_1(h)}| \neq |\frac{\varphi_2(g)}{\varphi_2(h)}|$. If the signs inside the absolute values are opposite, then g, h satisfy Criterion 3.3 and we are done. Otherwise, up to exchanging the role of T_1 and T_2, we can find non-zero integers p, q such that $0 < \frac{\varphi_1(g)}{\varphi_1(h)} < p/q < \frac{\varphi_2(g)}{\varphi_2(h)}$. Then $\frac{\varphi_1(g^q)}{\varphi_1(h^p)} < 1 < \frac{\varphi_2(g^q)}{\varphi_2(h^p)}$, so $\frac{\varphi_1(g^q h^{-p})}{\varphi_1(h^p)} < 0 < \frac{\varphi_2(g^q h^{-p})}{\varphi_2(h^p)}$, so Criterion 3.3 applies to $a = h^p, b = g^q h^{-p}$. □

Fact 3.6. *Assume that T_1 and T_2 are reducible, have homothetic length functions, that there is no invariant line in T_1 nor in T_2, and that for all $g \in G$, the same elements translate towards the fix end in T_1 and T_2.*

Then there is a point $x \in T_1 \times T_2$ such that every quadrant containing x is made heavy by a hyperbolic element.

Proof. One easily checks that one can find $g, h \in G$ whose axes in T_1 and T_2 are distinct. Up to changing g and h to their inverses, we may assume that $\omega_{T_1}(g) = \omega_{T_1}(h)$. By hypothesis, $\omega_{T_2}(g) = \omega_{T_2}(h)$. Therefore, Criterion 3.2 applies to $a = g, b = g^{-1}, c = h^{-1}$. □

This ends the proof of the direct implication of the Proposition. We now prove that $\mathcal{C}$ is empty in the exceptional cases. First, if T_1 is dihedral and if T_1 and T_2 have homothetic length functions, then T_2 is also dihedral, and one easily checks that $\mathcal{C}$ is empty. Therefore, let ω_1, ω_2 be two ends in T_1 and T_2 respectively, which are fixed by G, and such that h translates towards ω_1 in T_1 if and only if h^{-1} translates towards ω_2 in T_2. In other words, $\omega_{T_1}(h) = \omega_1$ if and only if $\omega_{T_2}(h^{-1}) = \omega_2$. We prove that for any quadrant

$Q = \delta_1 \times \delta_2$ such that $\omega_i \notin \partial_\infty \delta_i$, then Q is light. This will clearly imply that $\mathcal{C} = \emptyset$. Let x_i be the point at which δ_i is based, and take $x = (x_1, x_2)$ as a basepoint. Consider $g \in G$ such that $g.x_1 \in \delta_1$. Since $\omega_1 \in \partial_\infty \mathrm{Char}(g)$, one gets that $x_1 \in \mathrm{Char}(g)$: otherwise, the subtree $\overline{\delta_1}$ would not intersect $\mathrm{Char}(g)$ and would thus be disjoint from its image under g. In particular, g is hyperbolic translates away from ω_1. The symmetric argument in T_2 says that if $g.x_2 \in \delta_2$, then g translates away ω_2. Therefore, $\delta_1 \times \delta_2$ does not meet the orbit of the basepoint, and $\delta_1 \times \delta_2$ is light. Thus $\mathcal{C}$ is empty, and this ends the proof of the proposition. □

Remark 3.7. Assume that T_1 and T_2 are simplicial, and given an oriented edge $e \in T_i$ denote by $\delta(e)$ the direction based at the origin of e and containing the terminus of e. Then the end of the proof shows that if T_1 and T_2 satisfy the second hypothesis of the proposition, then for each pair of non-oriented edges e_1, e_2, there is a choice of orientations of e_1, e_2 (namely, not pointing towards ω_i) and choice of base point $*$ (namely $*_i$ is the origin of e_i), such that the orbit of $*$ does not meet $\delta(e_1) \times \delta(e_2)$. This fact implies that Scott's intersection number is also zero in this case (see section 10).

Corollary 3.8. *Let T_1, T_2 be two actions of a finitely generated group G on $\mathbb{R}$-trees. Assume that $\mathcal{C}(T_1 \times T_2) \neq \emptyset$.*

Then each heavy quadrant is made heavy by a hyperbolic element.

Proof. It follows from one of the three facts above that there is a point $x \in \mathcal{C}$ such that each quadrant containing x is made heavy by a hyperbolic element. Now consider any heavy quadrant $Q = \delta_1 \times \delta_2$. Since Q is heavy, there is a translate $g.x$ of x contained in Q. Since $x \in g^{-1}.Q$, consider a hyperbolic element h making $g^{-1}.Q$ heavy. Then ghg^{-1} makes Q heavy. □

4 Contractibility of the core

In all this section, we assume without loss of generality that T_1 and T_2 have a dense minimal subtree. The goal of this section is to understand when the core can fail to be connected. We saw that this occured when $T_1 = T_2$ is a simplicial tree without valence 2 vertex since in this case, $\mathcal{C} = \{(v, v) | v \text{ vertex in } T\}$. We will see that this is essentially the only case when it happens: Proposition 4.14 claims that this happens if and only if T_1 and T_2 refine a common simplicial G-tree T' as in the following diagram:

$$\begin{tikzcd} T_1 \arrow[dr] & & T_2 \arrow[dl] \\ & T' & \end{tikzcd} .$$

We will then prove that except in this pathological case, $\mathcal{C}$ is contractible and that there is an equivariant retraction by deformation of $T_1 \times T_2$ onto $\mathcal{C}$ (Proposition 4.17). In general, we will prove that one can enlarge $\mathcal{C}$ into a natural G-invariant subset $\hat{\mathcal{C}}$ (the *augmented core*) by adding some *diagonals*, so that $\hat{\mathcal{C}}$ is contractible.

4.1 Twice-light rectangles

We are interested in the case where a point in $T_1 \times T_2$ is removed *twice* from $\mathcal{C}$ like in figure 2. This phenomenon occured in the example where $T_1 = T_2$ is a simplicial tree.

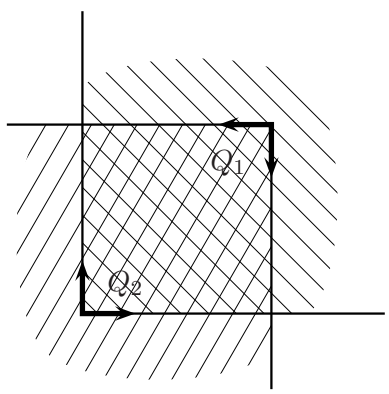

Figure 2: Two facing quadrants intersect in a twice-light rectangle

We need a little bit of terminology.

Definition 4.1 (Facing directions and facing quadrants). *Say that two directions $\delta, \delta' \subset T$, based at two distinct points x, x' face each other if one of the following equivalent conditions hold:*

1. $\delta \cup \delta' = T$
2. $\delta^* \cap \delta'^* = \emptyset$
3. $]x, x'[\subset \delta \cap \delta'$

Say that the quadrants $Q = \delta_1 \times \delta_2 \subset T_1 \times T_2$ and $Q' = \delta'_1 \times \delta'_2 \subset T_1 \times T_2$ are facing each other *if for both $i \in \{1, 2\}$, δ_i faces δ'_i.*

The proof of the statements contained in this definition is straightforward and left to the reader.

Definition 4.2 (Twice-light points and rectangles). *Consider Q, Q' two light quadrants facing each other. Then we say that $Q \cap Q'$ is a* twice-light rectangle.

Consider Q, Q' two light quadrants facing each other, and let $x = (x_1, x_2)$ and $x' = (x'_1, x'_2)$ their base points. Let R be the rectangle $]x_1, x'_1[\times]x_2, x'_2[$. The fact that Q and Q' face each other means that $R \subset Q \cap Q'$. We are going to prove that actually, $R = Q \cap Q'$.

Proposition 4.3 (A twice light rectangle is a rectangle). *Assume that the minimal subtrees of T_1 and T_2 are dense in T_1 and T_2. Consider Q, Q' two light quadrants facing each other, and let $x = (x_1, x_2)$ and $x' = (x'_1, x'_2)$ their base points. Let $Q \cap Q'$ be the corresponding twice light rectangle, and let R be the rectangle $]x_1, x'_1[\times]x_2, x'_2[$.*

Then $R = Q \cap Q'$, and none of the intervals $]x_i, x'_i[= p_i(R)$ contains a branch point.

Proof. Since Q and Q' face each other, $R \subset Q \cap Q'$. Now consider $(t_1, t_2) \in R$, assume that there at least three directions at t_1 and argue towards a contradiction (a symmetric argument will apply to t_2). Let η_1 be a direction at t_1 which does not contain the base points of δ_1 and δ'_1. Thus, $\eta_1 \subset \delta_1 \cap \delta'_1$. Since the minimal subtree of T_1 is dense in T_1, Corollary 1.4 implies that there exists an element $h \in G$ which is hyperbolic in T_1 and T_2 and such that $\omega_{T_1}(h) \in \partial_\infty \delta_1$. In particular, for k large enough, $h^k.*_1 \in \eta_1$. Since $\delta_2 \cup \delta'_2 = T_2$, up to taking a subsequence, we may assume for instance that for k large enough, $h^k.*_2 \in \delta_2$. Since $\eta_1 \subset \delta_1$, this contradicts the fact that $\delta_1 \times \delta_2$ is light. □

4.2 Connectedness without twice light rectangles

Let's start with the following remark: if $\mathcal{C}$ has some twice light rectangles, then $\mathcal{C}$ cannot be connected (at least if it is non-empty). Indeed, let Q, Q' be two light quadrants facing each other based at $x = (x_1, x_2)$ and $x' = (x'_1, x'_2)$ respectively. Then $Q \cup Q'$ contains $]x_1, x'_1[\times T_2$, so $p_1(\mathcal{C})$ does not meet $]x_1, x'_1[$. However, if $\mathcal{C}$ was connected, then $p_1(\mathcal{C})$ would be a non-empty connected G-invariant subset of T_1, so it would be dense by our minimality hypothesis, a contradiction.

We now prove that this is the only obstruction to the connectedness of $\mathcal{C}$.

Proposition 4.4. *Let T_1, T_2 be two actions of G on $\mathbb{R}$-trees, with dense minimal subtrees, such that $\mathcal{C}(T_1 \times T_2) \neq \emptyset$.*

Then $\mathcal{C}$ is connected if and only if $\mathcal{C}$ has no twice light rectangle.

In this case, for each rectangle R of $T_1 \times T_2$, the trace of $\mathcal{C}$ on R is either empty or connected.

Proof. We already proved that the presence of twice light squares prevents the connectedness of $\mathcal{C}$.

Let $x, x' \in R \cap \mathcal{C}$, and let R_0 be the rectangle $[x_1, x_1'] \times [x_2, x_2'] \subset R$. We denote by $a = (x_1, x_2')$ and $b = (x_1', x_2)$ the two other corners of R_0. We are going to prove that $R_0 \cap \mathcal{C}$ is connected, which will prove the proposition. Consider a light quadrant Q which meets R_0. Since Q cannot contain x nor x', its trace on R_0 is an open rectangle containing a or b. Moreover, if Q and Q' are light quadrants which intersect and such that $a \in Q$ and $b \in Q'$, then Q and Q' face each other. Since there is no twice light rectangle, this means that any light quadrant containing a does not intersect a light quadrant containing b.

Let $A \subset R_0$ (resp. B) be the union of the traces on R_0 of the light quadrants containing a (resp. b). Write A (resp. B) as an increasing union $A = \cup_k A_k$ where A_k is a finite union of traces of light quadrants containing a. Since $\mathcal{C}$ has no twice light rectangle, then for each k, $A_k \cap B_k = \emptyset$. Clearly, $R_0 \setminus A_k$ and $R_0 \setminus B_k$ are contractible (they are star-shaped), so $R_0 \setminus A_k \cup B_k$ is contractible.Thus $R_0 \setminus A \cup B$ is connected as a decreasing intersection of compact connected spaces. □

The proposition can be reformulated in a more general setting, which will be useful later:

Definition 4.5 (Coherent family of quadrants, Core). *A family of quadrants $\mathcal{Q}$ of $T_1 \times T_2$ is called* coherent *if it contains no pair of quadrants facing each other.*

Its core *$\mathcal{C}_{\mathcal{Q}}$ is defined by $\mathcal{C}_{\mathcal{Q}} = T_1 \times T_2 \setminus \cup_{Q \in \mathcal{Q}} Q$.*

Proposition 4.6. *The core $\mathcal{C}_{\mathcal{Q}}$ of a coherent family of quadrants $\mathcal{Q}$ is connected (maybe empty). Moreover, for each rectangle R of $T_1 \times T_2$, the trace of $\mathcal{C}_{\mathcal{Q}}$ on R is either empty or connected.*

4.3 The corners of a twice light rectangle

We now study in more detail twice light rectangles in order to define the augmented core $\hat{\mathcal{C}}$.

Lemma 4.7. *Let T_1, T_2 be two actions of G on $\mathbb{R}$-trees, such that $\mathcal{C}(T_1 \times T_2) \neq \emptyset$. Then any twice light rectangle is contained in a unique maximal twice light rectangle.*

Proof. We first rule out the case where either T_1 or T_2 is a line, since in this case, the existence of a twice light rectangle implies that $\mathcal{C}(T_1 \times T_2) = \emptyset$.

Let $R =]x_1, x_1'[\times]x_2, x_2'[$ be a twice light rectangle. Let $]y_i, y_i'[\subset T_i$ be the maximal open interval containing $]x_i, x_i'[$, and containing no branch point (equivalently, $]y_i, y_i'[$ is open in T_i and y_i, y_i' are branch points). Then it is clear that $]y_1, y_1'[\times]y_2, y_2'[$ is twice light, and that it is maximal for this property because of proposition 4.3. □

Definition 4.8. *Two quadrants $Q = \delta_1 \times \delta_2$ and $Q' = \delta_1' \times \delta_2'$ weakly face each other if δ_1 faces δ_1' or δ_2 faces δ_2'.*

Lemma 4.9. *Let T_1, T_2 be two actions of G on $\mathbb{R}$-trees, whose minimal subtrees are dense. Assume that Q and Q' are two light quadrants having a non-empty intersection. If Q weakly faces Q', then Q faces Q'.*

Proof. Let $Q = \delta_1 \times \delta_2$ and $Q' = \delta_1' \times \delta_2'$, and assume that δ_1 faces δ_1'. We need to prove that δ_2 faces δ_2'. If this wasn't the case, then δ_2 and δ_2' would be nested since $\delta_2 \cap \delta_2' \neq \emptyset$. So we assume for instance that $\delta_2 \subset \delta_2'$. Take a an element $\gamma \in G$ which is hyperbolic in T_1 and T_2 and such that $\omega_{T_2}(\gamma) \in \partial_\infty \delta_2$ (Corollary 1.4). Since $\delta_1 \times \delta_2$ is light, $\gamma^k.*_1 \notin \delta_1$ for k large enough, and since $\delta_1' \times \delta_2'$ is light, $\gamma^k.*_1 \notin \delta_1'$ for k large enough. But since δ_1 faces δ_1', $\delta_1 \cup \delta_1' = T_1$, a contradiction. □

Lemma 4.10. *Let T_1, T_2 be two actions of G on $\mathbb{R}$-trees, whose minimal subtrees are dense, and such that $\mathcal{C}(T_1 \times T_2) \neq \emptyset$. Let R be the closure a maximal twice light rectangle. Then $\mathcal{C} \cap R$ consists of exactly two opposite corners of R.*

Proof. Let $Q = \delta_1 \times \delta_2$ and $Q' = \delta_1' \times \delta_2'$ be two light quadrants facing each other such that $Q \cap Q'$ is the interior of R. Let (x_1, x_2) and (x_1', x_2') the base points of Q and Q'. We prove that $R \cap \mathcal{C}$ consists of the two points $a = (x_1, x_2')$ and $b = (x_1', x_2)$. Clearly, $R \cap \mathcal{C} \subset \{a, b\}$ since $R \setminus (Q \cup Q') = \{a, b\}$. Now assume that $a \notin \mathcal{C}$, and let $P = \eta_1 \times \eta_2$ be a light quadrant and containing a.

Since R is the closure of a maximal twice light rectangle, both coordinates of a and b are branch points. This implies that P cannot face Q since otherwise, $P \cap Q$ would be a twice light rectangle, but $p_1(P \cap Q)$ would contain the branch point $p_1(a)$, a contradiction. Similarly, P cannot face Q'.

On the other hand, P weakly faces Q or Q'; more precisely, one has that η_1 faces δ_1 or δ_1'. Indeed, $\delta_1^* \cap {\delta_1'}^* = \emptyset$ since δ_1 faces δ_1'. Now if η_1 does not face δ_1 nor δ_1', then η_1^* intersects the two subtrees δ_1^* and ${\delta_1'}^*$, and must

therefore contain the bridge joining them, which contradicts the fact that P contains a.

Since P contains a neighbourhood of a, P intersects both Q and Q'. Therefore, by lemma 4.9, we deduce that P faces Q or Q', a contradiction. □

4.4 The augmented core

In this section, we define the augmented core, and prove its connectedness by showing that it is the core of a coherent family of quadrants.

Definition 4.11. *Let T_1, T_2 be two actions of G on $\mathbb{R}$-trees, such that $\mathcal{C}(T_1 \times T_2) \neq \emptyset$, and let R be a maximal twice light rectangle. The* main diagonal *Δ_R is the diagonal of R joining its two corners lying in $\mathcal{C}$.*

The augmented core *$\hat{\mathcal{C}}$ of $T_1 \times T_2$ is the union of $\mathcal{C}$ and of the main diagonal of its maximal twice light rectangles.*

Proposition 4.12. *Let T_1, T_2 be two actions of G on $\mathbb{R}$-trees, such that $\mathcal{C}(T_1 \times T_2) \neq \emptyset$. Then $\hat{\mathcal{C}}$ is the core of a coherent family of quadrants. In particular, $\hat{\mathcal{C}}$ is connected, and it intersects each rectangle into a connected set.*

Proof. Let $\mathcal{Q}$ be the family of quadrants of $T_1 \times T_2$ which don't intersect $\hat{\mathcal{C}}$. Note that each quadrant of $\mathcal{Q}$ is light as it does not intersect $\mathcal{C}$. Moreover, $\mathcal{Q}$ is coherent. Indeed, assume that $Q, Q' \in \mathcal{Q}$ face each other. Then $Q \cap Q'$ is a twice light rectangle, and let R be the maximal twice light rectangle containing $Q \cap Q'$. Since the trace of $Q \cup Q'$ on R separates its two main corners, one deduces that $Q \cup Q'$ intersects the main diagonal Δ_R, a contradiction.

There remains to prove that $\hat{\mathcal{C}}$ is the core of $\mathcal{Q}$. We will prove the following fact later:

Fact 4.13. *A light quadrant Q meets at most one maximal twice light rectangle R. Moreover, in this case, the basepoint of Q lies in $\overline{R}$.*

By definition, $\hat{\mathcal{C}} \subset \mathcal{C}_{\mathcal{Q}} = T_1 \times T_2 \setminus \bigcup_{Q \in \mathcal{Q}} Q$. Moreover, it is clear that if $R = Q \cap Q'$ is a maximal twice light rectangle, then any element $x \in \overline{R} \setminus \Delta_R$ lies in a quadrant contained in Q or Q' and which does not meet Δ_R.

Now, let $x \notin \hat{\mathcal{C}}$ and which doesn't lie in the closure of a twice light rectangle. Let $Q = \delta_1 \times \delta_2$ be a light quadrant containing x. We will prove that x lies in a light quadrant which does not meet any twice light rectangle. Assume that Q intersects a maximal twice light rectangle R. The fact above

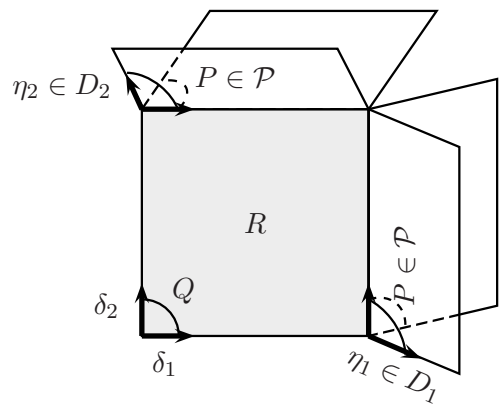

Figure 3: The quadrants of $\mathcal{P}$.

claims that the base point of Q lies in $\overline{R}$. Since R contains no branch point, $Q \setminus \overline{R}$ can be written as the following union of quadrants

$$Q \setminus \overline{R} = \bigcup_{P \in \mathcal{P}} P$$

where $\mathcal{P}$ is defined as follows (see figure 3): let D_i be the set of connected components of $\delta_i \setminus p_i(\overline{R})$ (these connected components are actually directions), and let $\mathcal{P}$ be the set of quadrants defined by

$$\mathcal{P} = \{\delta_1 \times \eta_2, \eta_1 \times \delta_2 \,|\, \eta_1 \in D_1, \eta_2 \in D_2\}.$$

Since $x \in P$ for some $P \in \mathcal{P}$, there remains to check that the quadrants of $\mathcal{P}$ are light and don't intersect a twice light rectangle.

The quadrants of $\mathcal{P}$ are clearly light since they are contained in Q. Moreover, if a twice light rectangle R' intersects a quadrant $P \in \mathcal{P}$, then it also intersects Q, so $R = R'$ a contradiction. Therefore, the quadrants of $\mathcal{P}$ don't meet any twice light rectangle, and hence don't intersect $\hat{\mathcal{C}}$. In other words, $\mathcal{P} \subset \mathcal{Q}$ and $x \notin \mathcal{C}_Q$. □

Proof of Fact 4.13. Let R be a maximal twice light rectangle contained in a light quadrant $Q = \delta_1 \times \delta_2$. We only need to prove that the base point $b = (b_1, b_2)$ of Q lies in $\overline{R}$. Indeed, it follows that two maximal twice light rectangles contained in Q have a nonempty intersection (they have the same germ at b since they intersect the same quadrant) and must therefore coincide.

We have to prove that for both $i \in \{1,2\}$, $b_i \in p_i(\overline{R})$. So assume for instance that, $b_1 \notin p_1(\overline{R})$. Then by connexity, either $p_1(\overline{R}) \subset \delta_1$ or $p_1(\overline{R}) \subset \delta_1^*$. The latter being impossible since R meets Q, it follows that $p_1(R) \subset \delta_1$. Now since R meets Q, δ_2 contains at least one of the endpoints $p_2(Q)$, call it a_2. The segment $p_1(R) \times \{a_2\}$ is contained in Q, and contains one of the endpoints of the main diagonal, which lies in $\mathcal{C}$. This contradicts the fact that Q is light. □

4.5 Characterization of the connectedness of the core

We now can prove that the core is disconnected if and only if T_1 and T_2 both refine a common splitting:

Proposition 4.14 (Characterization of the connectedness of the core.). *Let T_1, T_2 be two actions of G on $\mathbb{R}$-trees, whose minimal subtrees are dense, and such that $\mathcal{C}(T_1 \times T_2) \neq \emptyset$.*

Then $\mathcal{C}(T_1 \times T_2)$ is disconnected if and only if T_1 and T_2 are refinements of a common non-trivial action on a simplicial tree T'

$$\begin{tikzcd} T_1 \arrow[dr] & & T_2 \arrow[dl] \\ & T' & \end{tikzcd} .$$

Remark 4.15. The connectedness of $\mathcal{C}$ is also equivalent to the absence of twice light squares (Proposition 4.4), which is equivalent to the equality $\mathcal{C} = \hat{\mathcal{C}}$.

We first prove the following lemma.

Lemma 4.16. *Given any $x_1 \in T_1$, there is at most one maximal twice light rectangle R such that $x_1 \in p_1(R)$.*

In particular, $p_{1|\hat{\mathcal{C}}\setminus\mathcal{C}}$ is one-to-one.

Proof. Let $R =]a_1, b_1[\times]a_2, b_2[$ and $R' =]a_1', b_1'[\times]a_2', b_2'[$ be two maximal twice light rectangles as in the lemma. We know that a_1, b_1, a_1', b_1' are branch points, and that $]a_1, b_1[$ and $]a_1', b_1'[$ don't contain any branch point. Since $]a_1, b_1[$ and $]a_1', b_1'[$ have nonempty intersection, it follows that $]a_1, b_1[=]a_1', b_1'[$. By a similar argument, if $]a_2, b_2[$ intersects $]a_2', b_2'[$, then $R = R'$ and we are done. Otherwise, $]a_2', b_2'[$ is contained in $p_2(P)$ or in $p_2(Q)$, so R' is contained in P or Q. By lemma 4.13, $R = R'$. □

Proof of Proposition 4.14. If T_1 and T_2 both refine an action of G on a simplicial tree T', an argument similar to example 1 in section 2.2 shows to

the existence of twice light rectangles as follows. First, one can first assume without loss of generality that T_1 and T_2 are minimal. Let $e =]a, a'[$ be an open edge of T', and let $I_i = f_i^{-1}(e)$. We prove that I_i contains no branch point so I_i is an open interval. Otherwise, let $b_i \in I_i$ be a branch point, and let δ_i be a direction based at b_i which does not intersect $f_i^{-1}(a)$ and $f_i^{-1}(a')$; first, $f_i(\delta_i) = \{f_i(b_i)\}$ since otherwise, the preimage of some point of e would be disconnected. Now, by minimality, there is an element $h \in G$ which is hyperbolic in T_i and $\omega_{T_i}(h) \in \partial_\infty(\delta)$. Now the image of every point under sufficiently high powers of h ends in δ. This implies that the whole tree T_i is mapped to $\{f_i(b_i)\}$ under f_i, contradicting the non-triviality of the action of G on T'.

Denote by a_i and a_i' the enpoints of $\overline{I_i}$ which are mapped to a and a' respectively under f_i, and let δ_i and δ_i' be the directions in T_i based at a_i and a_i', and containing I_i. Let $Q = \delta_1 \times \delta_2'$ and $Q' = \delta_1' \times \delta_2$. Choose a base point $* = (*_1, *_2)$ such that $f_1(*_1) = f_2(*_2) \in e$. The quadrant Q is light because if $g.* \in Q$, then $g.f_1(*_1) = g.f_2(*_2) \in f_1(\delta_1) \cap f_2(\delta_2') = e$ so $g.* \in I_1 \times I_2$ and cannot go to infinity. Since the same argument applies to Q', this concludes to the existence of a twice light rectangle in $T_1 \times T_2$.

To prove the converse, the idea is to obtain T' by collapsing everything but the main diagonals of twice light rectangles. More precisely, let T' be the simplicial tree defined as follows: its vertices are the connected components of $\mathcal{C}$, its edges are the main diagonals of the twice light rectangles. The endpoints of edges are the natural ones.

Lemma 4.16 implies that each edge disconnects T', so T' is a tree. Now let $x \in T_i$, and let's define $f_i(x)$. If $x \in p_i(\mathcal{C})$, then $p_i^{-1}(x)$ is connected, so it defines a point of T' which we assign to $f_i(x)$. If $x \in p_i(R)$ for a maximal twice light rectangle R, we send x to the corresponding point of Δ_R. The map f_i is now defined on $p_i(\mathcal{C})$ which is a dense subtree of T_i. For the combinatorial metric on T', f_i is Lipschitz and has therefore a unique Lipschitz extension to T_i. It is clear that f_i preserves alignment: if x separates y from z in T_i and $f_i(x)$ is distinct from $f_i(y)$, $f_i(z)$, then $f_i(x)$ separates $f_i(y)$ from $f_i(z)$ in T'. □

4.6 Flow and contractibility of the augmented core

Proposition 4.17. *Let T_1, T_2 be a pair of minimal actions of G on $\mathbb{R}$-trees whose core is non-empty. Let $\hat{\mathcal{C}}$ be the augmented core.*

Then there is an equivariant retraction of $T_1 \times T_2$ onto $\hat{\mathcal{C}}$. In particular, $\hat{\mathcal{C}}$ is contractible. Moreover, for any rectangle $R \subset T_1 \times T_2$, $R \cap \hat{\mathcal{C}}$ is empty or contractible.

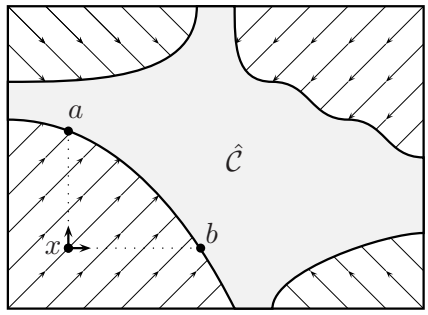

Figure 4: The equivariant flow φ_t

Remark. Minimality can be replaced here by the weaker assumption that $T_i = p_i(\hat{\mathcal{C}})$. In particular, the contractibility of $\hat{\mathcal{C}}$ remains true without minimality hypothesis: $\hat{\mathcal{C}}$ is a deformation retract of $p_1(\hat{\mathcal{C}}) \times p_2(\hat{\mathcal{C}})$.

We will need a slightly more general statement.

Lemma 4.18. *Let $\mathcal{Q}$ be a family of quadrants whose core $\mathcal{C}_{\mathcal{Q}}$ is connected and such that for both $i \in \{1, 2\}$, $p_i(\mathcal{C}_{\mathcal{Q}}) = T_i$.*

Then there is a G-equivariant semi-flow φ_t on $T_1 \times T_2$ which restricts to the identity on $\mathcal{C}_{\mathcal{Q}}$, and such that for all $x \in T_1 \times T_2$, there exists $t \in [0, +\infty[$ such that $\varphi_t(x) \in \mathcal{C}_{\mathcal{Q}}$.

Moreover, for any rectangle R such that for both $i \in \{1, 2\}$, $p_i(R \cap \mathcal{C}_{\mathcal{Q}}) = p_i(R)$, R is invariant under φ_t.

Proof of the proposition from the lemma. Minimality and the connectedness of $\hat{\mathcal{C}}$ ensures that $p_i(\hat{\mathcal{C}}) = T_i$. Thus the hypotheses of the lemma are satisfied, so φ_t provides the required equivariant retraction by deformation of $T_1 \times T_2$ onto $\hat{\mathcal{C}}$.

The only thing remaining to check is that the trace of $\hat{\mathcal{C}}$ on a rectangle R is either empty or contractible. But if $R \cap \hat{\mathcal{C}}$ is nonempty, let $R_0 = p_1(R \cap \hat{\mathcal{C}}) \times p_2(R \cap \hat{\mathcal{C}})$ be the smallest rectangle containing $R \cap \hat{\mathcal{C}}$. The lemma claims that R_0 is invariant under the semi-flow so $R \cap \hat{\mathcal{C}}$ is a retract by deformation of R_0. □

Proof of the lemma. For all $t \in [0, \infty]$ and $x \in T_1 \times T_2$, we want to define $\varphi_t(x)$ (see figure 4). If $x \in \mathcal{C}_{\mathcal{Q}}$, we let $\varphi_t(x) = x$ for all $t \geq 0$.

Otherwise, using the fact that $p_i(\mathcal{C}_{\mathcal{Q}}) = T_i$, choose $a, b \in \mathcal{C}$ such that $p_1(a) = p_1(x)$ and $p_2(b) = p_2(x)$ and let $R = [x_1, b_1] \times [x_2, a_2]$ be the smallest rectangle containing a and b (we use the notation $a_i = p_i(a)$ and

$b_i = p_i(b)$). By proposition 4.6, $\mathcal{C}_\mathcal{Q} \cap R$ is connected. Moreover, $R \backslash \mathcal{C}_\mathcal{Q}$ has at most two connected components: the component R_x containing x, and the component containing the opposite corner (b_1, a_2) if $(b_1, a_2) \notin \mathcal{C}_\mathcal{Q}$ (indeed, the two components are the union of the traces of quadrants containing the corners x and (b_1, a_2) respectively). We say that a rectangle R is a chart for x if x is a corner of R, and if there are two points $a, b \in R \cap \mathcal{C}_\mathcal{Q}$ having the same horizontal and vertical projection as x respectively.

Given a chart R for x, we identify it with $[0, l_1] \times [0, l_2] \subset \mathbb{R}^2$ by sending x, a and b to $(0, 0)$, $(l_1, 0)$, $(0, l_2)$ where $l_1 = d(x_1, b_1)$ and $l_2 = d(x_2, a_2)$. Flow lines will be parallel to the vector $\vec{v} = (1, 1)$. Using this identification, given $y \in R$ and $t \in [0, \min(l_1, l_2)]$ not too large, it makes sense to write $y + t\vec{v}$.

Since $R \cap \mathcal{C}_\mathcal{Q}$ is connected, there exists $t \leq \min(l_1, l_2)$ such that $x + t\vec{v} \in \mathcal{C}_\mathcal{Q}$ since otherwise, this segment would separate a from b, contradicting the connectedness of $\mathcal{C}_\mathcal{Q} \cap R$. Similarly, for all $y \in R_x$, there exists $t \in [0, \min(l_1, l_2)]$ such that $y + t\vec{v} \in \mathcal{C}_\mathcal{Q}$. Thus, given the choice of R, we can define $\tau_R(y)$ to be the smallest positive s such that $y + s\vec{v} \in \mathcal{C}_\mathcal{Q}$. We now define the flow on R by $\varphi_t^R(y) = y + \min(t, \tau_R(y))\vec{v}$.

The definition of the semi-flow does not change if we change a chart R to a smaller one R'. Indeed, the point $y + \tau_R(y)\vec{v}$ also lies R' since otherwise, there would be no s such that $y + s\vec{v} \in \mathcal{C}_\mathcal{Q} \cap R'$. This means that the definition of τ_R and $\tau_{R'}$ agree. Therefore, the definitions of φ_t^R and $\varphi_t^{R'}$ agree. Since there is a smallest chart for defining the flow at a given point x, the definition of the semi-flow does not depend on any choice.

Note that by definition, $\varphi_t(x)$ stays in any chart for x. Now if R is a rectangle such that for both $i \in \{1, 2\}$, $p_i(R \cap \mathcal{C}_\mathcal{Q}) = p_i(R)$, then R contains a chart for each point of R. In particular, R is invariant under φ_t.

Finally, we prove the continuity of $\varphi : \mathbb{R}_+ \times T_1 \times T_2 \to T_1 \times T_2$ by proving that the semi-flow is Lipschitz with respect to each variable separately. On $T_1 \times T_2$, we consider the distance $d(x, y) = max_{i \in \{1,2\}} d_{T_i}(x_i, y_i)$. Clearly, $t \mapsto \varphi_t(x)$ is 1-Lipschitz. Now consider $x_1 \mapsto \varphi_t(x_1, x_2)$ where t and x_2 are fixed. We choose $b_1 \in T_1$ such that $b = (b_1, x_2) \in \mathcal{C}_\mathcal{Q}$. Let $x_1, x_1' \in T_1$, and denote $x = (x_1, x_2)$ and $x' = (x_1', x_2)$. Let $l = d(x_1, x_1')$.

Case 1: $x \notin \mathcal{C}_\mathcal{Q}$ and $x' \in \mathcal{C}_\mathcal{Q}$. In this case, choose $R = [x_1, x_1'] \times [x_2, a_2]$ as a chart, where $(x_1, a_2) \in \mathcal{C}_\mathcal{Q}$. Then, $d(\varphi_t(x), \varphi_t(x')) = d(\varphi_t(x), x') \leq l$. Indeed let $\lambda = \min(t, \tau(x))$, and note that $\lambda \leq l$ because $\varphi_t(x) \in R$. Then $d(\varphi_t(x), x') = ||\lambda\vec{v} - x'|| = \max(|\lambda|, |\lambda - l|) \leq l$.

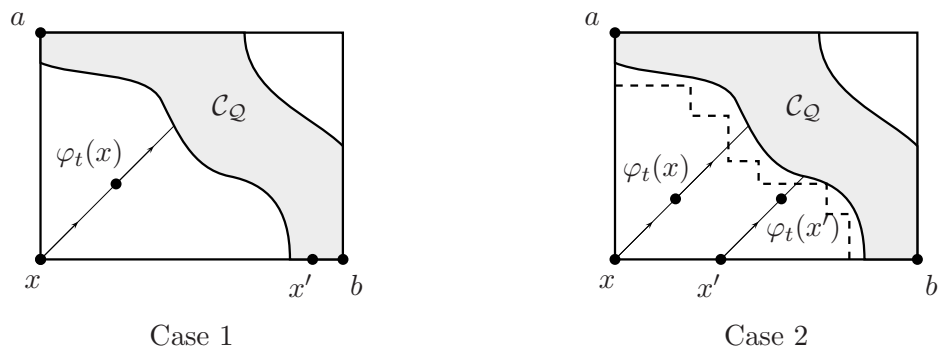

Figure 5: The flow is Lipschitz

Case 2: x and x' don't lie in $\mathcal{C}_{\mathcal{Q}}$, and $x'_1 \in [x_1, b_1]$ (remember that b_1 is such that $(b_1, x_2) \in \mathcal{C}_{\mathcal{Q}}$). In this case, we choose $R = [x_1, b_1] \times [x_2, a_2]$ as a chart where $a = (x_1, a_2) \in \mathcal{C}_{\mathcal{Q}}$. The arc $[x_1, x'_1] \times \{x_2\}$ cannot intersect $\mathcal{C}_{\mathcal{Q}}$ because fibers are convex and $(b_1, x_2) \in \mathcal{C}_{\mathcal{Q}}$. Thus x and x' are in the same component R_x of $R \setminus \mathcal{C}_{\mathcal{Q}}$. Let $\lambda = \min(t, \tau(x))$ and $\lambda' = \min(t, \tau(x'))$. Then $d(\varphi_t(x), \varphi_t(x')) = ||(\lambda, \lambda) - (\lambda' + l, \lambda')|| \leq l + |\lambda - \lambda'|$. There remains to prove that $z_1 \mapsto \tau(z_1, x_2)$ is a Lipschitz function in restriction to R_x. Write R_x as an increasing union of sets R_k where each R_k is a finite union of traces of light quadrants on R. It is easy to check that the piecewise linear map τ_k obtained by replacing R_x by R_k is $\sqrt{2}$-Lipschitz. The function τ being the supremum of the fuctions τ_k, it is therefore $\sqrt{2}$-Lipstchitz

We now show how to deduce the other cases from case 1 and 2: we just have to consider the case where $x, x' \notin \mathcal{C}_{\mathcal{Q}}$. Consider the fiber $\mathcal{F}_1 = \{b_1 \in T_1 \,|\, (b_1, x_2) \in \mathcal{C}_{\mathcal{Q}}\}$. If $\mathcal{F}_1$ meets $[x_1, x'_1]$ in a point b'_1, we apply case 1 to the pair x, b' and to the pair b', x' and apply triangle inequality. If $\mathcal{F}_1$ does not meet $[x_1, x'_1]$, let x''_1 be the center of the tripod (x_1, x'_1, b_1). Now apply case 2 to the pair x, x'' and to the pair x'', x'. □

4.7 The augmented core is CAT(0).

Let d be the usual CAT(0) metric d on $T_1 \times T_2$ defined by

$$d((a_1, a_2), (b_1, b_2)) = \sqrt{d_{T_1}(a_1, b_1)^2 + d_{T_2}(a_2, b_2)^2}.$$

Let $d_{\hat{\mathcal{C}}}$ be the path metric induced by d on $\hat{\mathcal{C}}$

$$d_{\hat{\mathcal{C}}}(x, y) = \inf\{\text{length}(c) |\ c \text{ path joining } x \text{ to } y \text{ in } \hat{\mathcal{C}}\}$$

where the length is measured with d.

Proposition 4.19. *When endowed with the metric $d_{\hat{\mathcal{C}}}$ above, the augmented core $\hat{\mathcal{C}}$ is CAT(0).*

Proof. First, the result is clear when T_1 and T_2 are simplicial trees since $\hat{\mathcal{C}}$ is a simply connected square complex, and the link at each vertex has no has no non-trivial loop of length less than 2π because this is already true in $T_1 \times T_2$.

For $\mathbb{R}$-trees, first note that the metric $d_{\hat{\mathcal{C}}}$ is well defined and finite since any two points are joined by a Lipschitz path (4.17) (note however that it might not be complete as T_i is itself usually not complete). Then, if K_1, K_2 are convex subsets of T_1 and T_2 respectively, for any Lipschitz path $c : [0,1] \to \hat{\mathcal{C}}$ joining two points of $K_1 \times K_2 \cap \hat{\mathcal{C}}$ there is a shorter path in $K_1 \times K_2 \cap \hat{\mathcal{C}}$ joining them: for each component $]a, b[$ of $[0,1] \setminus (p_1 \circ c)^{-1}(K_1)$, one has that $p_1(c(a)) = p_1(c(b)) \in K_1$, and one can replace c on $[a, b]$ by the geodesic in the vertical fiber of $p_1(c(a))$ and get a shorter path in $\hat{\mathcal{C}}$ with the same Lipschitz constant. Doing this for every such component, we get a shorter path c' such that $p_1 \circ c'([0,1]) \subset K_1$. Doing the symmetrical operation on c', we get a shorter path in $K_1 \times K_2 \cap \hat{\mathcal{C}}$. Given $a = (a_1, a_2), b = (b_1, b_2) \in \hat{\mathcal{C}}$, one can take K_i to be the compact interval $K_i = [a_i, b_i]$, and the compactness of $K_1 \times K_2 \cap \hat{\mathcal{C}}$ implies that the infimum in $d(a, b)$ $\hat{\mathcal{C}}$ is achieved. In particular $\hat{\mathcal{C}}$ is geodesic, and sets of the form $K_1 \times K_2 \cap \hat{\mathcal{C}}$ are convex.

Moreover, there is a unique geodesic between two given points. Otherwise, one can find two points a, b with two geodesics c_1, c_2 joining them with $c_1 \cap c_2 = \{a, b\}$. The fact that the trace of a rectangle is convex in $\hat{\mathcal{C}}$ implies that c_1 and c_2 are graphs of monotonous functions in the smallest rectangle containing $\{a, b\}$. We now see c_1, c_2 as maps of monotonous functions $I_1 \to I_2$, and assume for instance that $c_1 \leq c_2$. Since the set lying between c_1 and c_2 is contained in $\hat{\mathcal{C}}$, if c_1 is not concave, then one could shorten it. Similarly, c_2 is necessarily convex. This implies $c_1 = c_2$.

Now to prove that $\hat{\mathcal{C}}$ is CAT(0), since any geodesic triangle is contained in the product of two tripods, we need only to prove that $K_1 \times K_2 \cap \hat{\mathcal{C}}$ is CAT(0) where K_i is a (compact) tripod in T_i. Let $X = \hat{\mathcal{C}} \cap K_1 \times K_2$. Since X can be obtained by removing from $K_1 \times K_2$ a countable set of quadrants, write X as a decreasing intersection of a sequence of sets X_k obtained by removing finitely many quadrants from $K_1 \times X_2$. The argument in the simplicial setting implies that X_k is CAT(0). Consider a sequence of linearly parametrized geodesics $c_k : [0,1] \to X_k$ joining two points $a, b \in X$. Up to extracting a subsequence, c_k converges to a curve c joining a to b in X. General nonsense shows that $\text{length}(c) \leq \lim \text{length}(c_k)$ and since

$X \subset X_k$, length$(c) \geq$ length(c_k), so the path metrics on X_k converge to the path metric on X. It follows that X is CAT(0). $\square$

5 Characterization of the core

Proposition 5.1 (Characterization of the core). *Let T_1, T_2 be two actions of a group G on $\mathbb{R}$-trees such that $\mathcal{C} \neq \emptyset$. Let $F \subset T_1 \times T_2$ be a non-empty closed connected G-invariant subset with convex fibers. Then F contains $\mathcal{C}(T_1 \times T_2)$.*

Moreover, $\mathcal{C}$ is the intersection of all such sets F.

If T_1 and T_2 are not the refinements of a common splitting, then $\mathcal{C}$ is itself a closed connected subset with convex fibers. We thus get:

Corollary 5.2. *Let T_1, T_2 be two actions of G on $\mathbb{R}$-trees whose minimal subtrees are dense. Assume that $\mathcal{C}$ is non-empty and that T_1 and T_2 are not the refinement of a common simplicial non-trivial action.*

Then $\mathcal{C}$ is the smallest non-empty closed invariant connected subset of $T_1 \times T_2$ having convex fibers.

We will often use this characterization of the core under the following form:

Corollary 5.3. *Let T_1, T_2 be two actions of a group G on $\mathbb{R}$-trees. Let X be a nonempty connected space with an action of G such that there are two equivariant maps f_1, f_2 from X to T_1 and T_2 such that the preimage of each point of T_i is connected. Let $F = (f_1, f_2) : X \to T_1 \times T_2$.*

Then $\overline{F(X)}$ contains $\mathcal{C}$.

Proof of corollary 5.3. Since $\overline{F(X)}$ is an nonempty invariant closed connected subset of G, we just have to prove that it has connected fibers. By Corollary 5.5 below, we need only to check that $F(X)$ has connected fibers. So let $x \in T_1$, and consider a fiber $F(X) \cap p_1^{-1}(x_1)$. But this fiber can be written as $F(f_1^{-1}(x_1))$, which is connected since $f_1^{-1}(x_1)$ is connected. $\square$

The main result to prove the proposition is the following lemma.

Lemma 5.4. *Let T_1, T_2 be two $\mathbb{R}$-trees and let F be a nonempty connected subset of $T_1 \times T_2$ with convex fibers. Then the complement of $\overline{F}$ is a union of quadrants.*

This corollary follows immediately:

Corollary 5.5. *If F is nonempty, connected and has convex fibers, then so is $\overline{F}$.*

Remark. Note that this is of course false if one removes any connectedness assumption: just take $E = \{(x,x) | \, x \in \mathbb{Q}\} \cup \{(x,-x) | \, x \in \mathbb{R} \setminus \mathbb{Q}\}$ in $\mathbb{R}^2$.

Proof of the proposition from the lemma. Let $\mathcal{Q}$ be the family of quadrants which don't intersect F so that, by lemma 5.4, $F = T_1 \times T_2 \setminus \bigcup_{Q \in \mathcal{Q}} Q$. To prove that F contains $\mathcal{C}$, we only need to prove that any quadrant $Q \in \mathcal{Q}$ is light. By choosing the base point in F, the orbit of the base point does not meet any quadrant $Q \in \mathcal{Q}$ so the proposition follows. $\square$

We will use the following terminology: if $Q = \delta_1 \times \delta_2$ is a quadrant based at $x = (x_1, x_2)$, we call $\partial_1 Q = \{x_1\} \times \delta_2$ (resp. $\partial_2 Q = \delta_1 \times \{x_2\}$) the *vertical* (resp. the *horizontal*) boundary of Q. Note that $\partial Q = \partial_1 Q \amalg \partial_2 Q \amalg \{x\}$. Say that two quadrants $\delta_1 \times \delta_2$ and $\delta_1' \times \delta_2'$ based at the same point are *opposite* if $\delta_1 \neq \delta_1'$ and $\delta_2 \neq \delta_2'$.

Let's start with the following fact:

Fact 5.6. *Let $T_1 \times T_2$ be two $\mathbb{R}$-trees and let F be a nonempty connected subset of $T_1 \times T_2$ with convex fibers. Fix a point $x \notin F$.*

1. *If F meets two opposite quadrants based at x, then there exists a quadrant P, based at x, such that F intersects the horizontal and the vertical boundary of P.*
2. *Let P be a quadrant based at x such that F intersects the horizontal and the vertical boundary of P. Then the closure of any quadrant opposite to P doesn't intersect F. In other words, any quadrant whose closure intersects F has a common (vertical or horizontal) boundary with P. Moreover, F meets P.*

Proof of the fact. 1. Let $Q = \delta_1 \times \delta_2$, $Q' = \delta_1' \times \delta_2'$ be two opposite quadrants based at x which intersect F. Since F is connected and does not contain x, F meets $\partial_1 Q$ or $\partial_2 Q$. Assume for instance that F meets $\partial_1 Q = \{x_1\} \times \delta_2$. For the same reasons, F meets $\partial_1 Q'$ or $\partial_2 Q'$. Since fibers of F are convex, and since $x \notin F$, F cannot intersect $\partial_1 Q'$. Therefore F meets both boundaries of the quadrant $P = \delta_1' \times \delta_2$.

2. Now let $P = \rho_1 \times \rho_2$ be a quadrant based at (x_1, x_2) such that F intersects $\partial_1 P$ and $\partial_2 P$. Convexity of fibers implies that F cannot intersect the set $A = \rho_1^* \times \{x_2\} \cup \{x_1\} \times \rho_2^*$. Now let Q be a quadrant opposite to P. Since $\partial Q \subset A \cup \{x\}$, the connectedness of F prevents F from intersecting $\overline{Q}$. To prove that F meets P, just note that $A \cup P \cup \{x\}$ separates $\partial_1 P$ from $\partial_2 P$. $\square$

Proof of Lemma 5.4. Let $x = (x_1, x_2) \notin \overline{F}$. We have to find a quadrant Q containing x and disjoint from F. Let $V = V_1 \times V_2$ be an open neighbourhood of x which does not intersect F. If F does not intersect any quadrant based at x, then for instance, one can assume that F is contained in $\{x_1\} \times \delta_2$ for some direction δ_2 at x_2, and the result is clear.

Let $a \in F$ lying in a quadrant based at x. Let $y \in V \cap]x_1, a_1[\times]x_2, a_2[$, and let Q_y be the quadrant based at y containing x (see figure 6 and 7). If $Q_y \cap F = \emptyset$, then we are done. Otherwise, F meets two opposite quadrants based at y (namely Q_y and the quadrant containing a). The fact above says that there is a quadrant $P_y = \rho_1 \times \rho_2$ based at y such that F meets both the horizontal and the vertical boundary of P_y. Since P_y has a common boundary with every quadrant at y meeting F, we can assume for instance that P_y and Q_y share their vertical boundary. Consider a point $v = (y_1, v_2) \in F \cap \partial_1 P_y$, and a point $u = (u_1, y_2) \in F \cap \partial_2 P_y$. We distinguish two cases:

1. either $x_2 \notin [v_2, y_2]$
2. or $x_2 \in [v_2, y_2]$

First assume that case 1 occurs (figure 6). Since $x \in Q_y$, one has that x_2 and v_2 are in a common direction based at y_2 (namely, the vertical direction of Q_y). Therefore, $[y_2, v_2]$ and $[y_2, x_2]$ have a common nondegenerate initial segment $[y_2, z_2]$. One has $z_2 \neq x_2$ since otherwise case 2 would occur, and $z_2 \neq v_2$ because F does not intersect V. This means that the three directions $\delta(y_2)$, $\delta(x_2)$ and $\delta(v_2)$ based at z_2 and containing respectively y_2, x_2, and v_2 are distinct. Since x_2, z_2, y_2, a_2 are aligned in this order, $a_2 \in \delta(y_2)$.

Now consider the point $z = (y_1, z_2) \in V$. In particular $z \notin F$. Let $Q'_z = \delta_1 \times \delta(x_2)$ be the quadrant at z containing x. If Q'_z does not intersect F, we are done. Otherwise, there are two opposite quadrants at z meeting F (namely Q'_z and the quadrant $\eta_1 \times \delta(y_2)$ containing a). The quadrant P'_z given by point 1 of the fact is one of the two quadrants $\delta_1 \times \delta(y_2)$ or $\eta_1 \times \delta(x_2)$. Since F intersects the vertical boundary of P'_z, F contains a point in $\{y_1\} \times \delta(y_2)$ or in $\{y_1\} \times \delta(x_2)$. Since $v \in \{y_1\} \times \delta(v_2)$ also lies in F, convexity of fibers contradicts the fact that $z \notin F$. This concludes case 1.

Now we assume that $x_2 \in [v_2, y_2]$ (see figure 2). Let $z = (y_1, z_2)$ where $z_2 \in V_2 \cap]x_2, v_2[$. We are going to prove that the quadrant Q'_z, based at z and containing x does not meet F by finding a quadrant P'_z opposite to Q'_z, and meeting F at its two boundaries. The fact will then conclude.

Let ρ'_2 be the direction at z_2 containing v_2, and let $\rho'_1 = \rho_1$. Since we are in case 2, $P'_z = \rho'_1 \times \rho'_2$ is opposite to Q'_z. Moreover, the choice of ρ'_2 implies that F meets the vertical boundary of P'. Now notice that

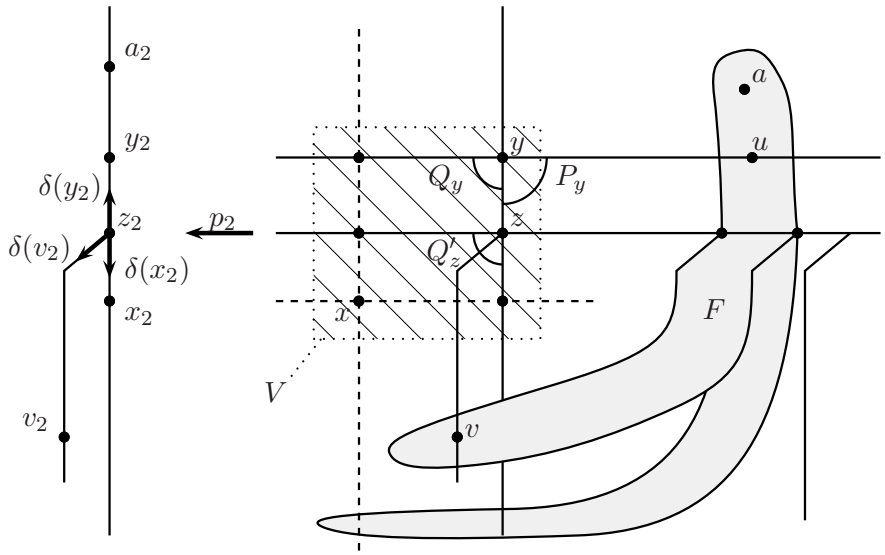

Figure 6: Proof of lemma 5.4, case 1

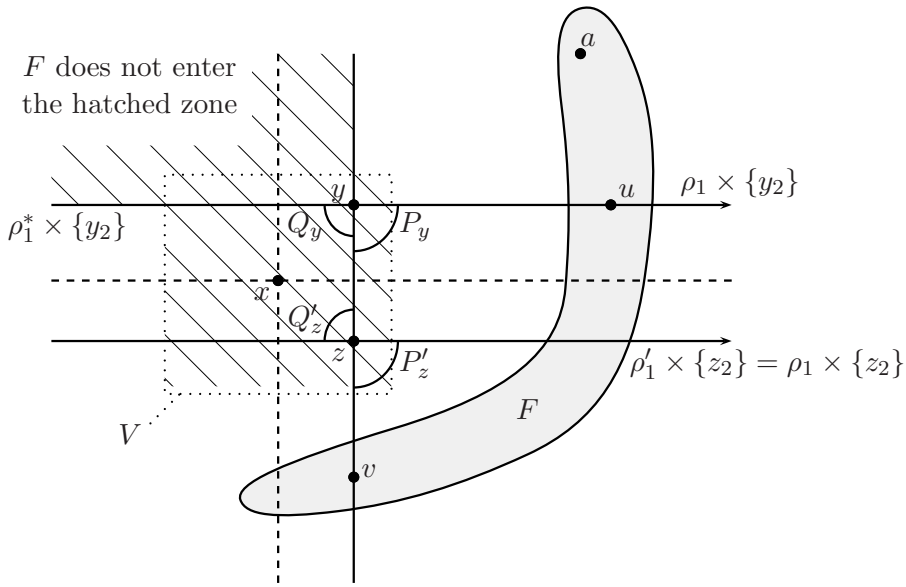

Figure 7: Proof of lemma 5.4, case 2

$\rho_1^* \times \{y_2\} \cup V \cup \rho_1 \times \{z_2\}$ separates u from v. Moreover, $\rho_1^* \times \{y_2\}$ does not intersect F since it is contained in the closure of the union of quadrants opposite to P_y. Nor does V intersect F. Thus, since F contains u and v, F must intersect $\rho_1 \times \{z_2\}$, which is the horizontal boundary of P'_z. Thus F meets both boundaries of P'_z, which implies that F does not meet Q'_z, so Q'_z is the desired quadrant. □

6 Compatibility of tree actions

We say that $\mathcal{C}$ is *1-dimensional* if it does not contain any rectangle $I_1 \times I_2$ where I_1 and I_2 are nondegenerate arcs. The proof will show that when $\mathcal{C}$ is 1-dimensional, $\hat{\mathcal{C}}$ has a natural structure of $\mathbb{R}$-tree, and is a common refinement of T_1 and T_2.

Theorem 6.1 (compare [SS00]). *Let T_1, T_2 be two minimal actions of G on $\mathbb{R}$-trees, such that $\mathcal{C}(T_1 \times T_2) \neq \emptyset$.*

Then T_1 and T_2 have a common refinement if and only if $\mathcal{C}$ is 1-dimensional.

Remark. The result does not hold if we don't assume that $\mathcal{C} \neq \emptyset$: an abelian action having no invariant line, and the corresponding action by translation on $\mathbb{R}$ have no common refinement.

Proof. First assume that T_1 and T_2 have a common refinement T_0, and denote by $f_i : T_0 \to T_i$ an equivariant map preserving alignement. Consider the map $F = (f_1, f_2) : T_0 \to T_1 \times T_2$. By corollary 5.3, $\overline{F(T_0)}$ contains $\mathcal{C}$.

Now, $F(T_0)$ is 1-dimensional: this is clear in the simplicial context; in general, this can be proved as follows. Take $a = (a_1, a_2)$, $b = (a_1, c_2)$, $c = (c_1, c_2)$, $d = (c_1, a_2)$ be the corners of a rectangle contained in $F(T_0)$, and let a_0, b_0, c_0, d_0 be some preimages in T_0. Let $K_0 \subset T_0$ be the convex hull of $\{a_0, b_0, c_0, d_0\}$. Then one has either $[a_0, b_0] \cup [c_0, d_0] = K_0$ or $[b_0, c_0] \cup [d_0, a_0] = K_0$. Let 's assume for instance that $[a_0, b_0] \cup [c_0, d_0] = K_0$. Now since $f_1(a_0) = f_1(b_0)$, f_1 is constant on $[a_0, b_0]$. For similar reasons, f_1 is constant on $[c_0, d_0]$. Thus f_1 is constant on K_0, a contradiction. One deduces that $\overline{F(T_0)}$ is also 1-dimensional: consider a non-degenerate rectangle $R \subset \overline{F(T_0)}$ and let $x \in R$ which does not lie on its boundary. Then the four quadrants based at x and containing the four corners of R intersect $F(T_0)$. By fact 5.6, $x \in F(t_0)$.

Conversely, assume that $\mathcal{C}$ and thus $\hat{\mathcal{C}}$ is one dimensional. If T_1 and T_2 are simplicial trees, then $\hat{\mathcal{C}}$ is a contractible one-complex, i. e. a simplicial

tree. In general, we will prove that $\hat{\mathcal{C}}$ is an $\mathbb{R}$-tree when endowed with the metric $d((x_1,x_2),(y_1,y_2)) = d_{T_1}(x_1,y_1) + d_{T_2}(x_2,y_2)$. One can deduce that $\hat{\mathcal{C}}$ itself is a common refinement for T_1 and T_2: the map $p_i : \hat{\mathcal{C}} \to T_i$ preserves alignement because $\hat{\mathcal{C}}$ has convex fibers.

Let's prove that $\hat{\mathcal{C}}$ is an $\mathbb{R}$-tree. We have already proved that $\hat{\mathcal{C}}$ is CAT(0) and therefore geodesic. Assume that $\hat{\mathcal{C}}$ contain an embedded circle $c = (c_1,c_2) : S^1 \to \hat{\mathcal{C}}$. Then c_1 is necessarily non constant, so there exists a non-degenerate interval $[a,b] \subset S^1$ with $c_1(a) = c_1(b) \notin c_1(]a,b[)$. Note that the segment $\{c_1(a)\} \times [c_2(a),c_2(b)]$ is contained in $\hat{\mathcal{C}}$ by convexity of fibers. Now $c_1(]a,b[)$ is contained in a direction based at $c_1(a)$, so for all $\varepsilon > 0$, there exists $a' \in (]a,b[)$ close to a and $b' \in]a,b[$ close to b such that $c_1(a') = c_1(b')$, $d(c_2(a),c_2(a')) < \varepsilon$ and $d(c_2(b),c_2(b')) < \varepsilon$. If ε was chosen very small compared to $d(c_2(a),c_2(b))$, then the segments $[c_2(a),c_2(b)]$ and $[c_2(a'),c_2(b')]$ in T_2 must intersect in a nondegenerate interval, say I_2. Now the segments $\{c_1(a)\} \times I_2$ and $\{c_1(a')\} \times I_2$ are contained in $\hat{\mathcal{C}}$ by convexity of fibers, which implies that the rectangle $[c_1(a),c_1(a')] \times I_2$ is contained in $\hat{\mathcal{C}}$, a contradiction.

□

7 Topological interpretation of the intersection number

We now give a topological interpretation of the intersection number of two splittings.

We need a few definitions. Given a connected cell complex X and a (maybe disconnected) subcomplex $Y \subset X$, say that Y is 2-*sided* if Y has a neighbourhood in X homeomorphic to $Y \times [-\varepsilon,\varepsilon]$. Let $\tilde{X}$ be its universal covering, and $\tilde{Y}$ be the preimage of Y in $\tilde{X}$. The *tree dual to* $Y \subset X$ is the graph T_Y whose vertices are connected components of $\tilde{X} \setminus \tilde{Y}$ and whose edges are connected components of $\tilde{Y}$, and an edge e is adjacent to a vertex v if $e \subset \overline{v}$. The simple connectedness of $\tilde{X}$ implies that T_Y is a tree, and it is clearly endowed with an action of $\pi_1(\Sigma)$. Given Y_1, Y_2 two 2-sided subcomplexes of X, say that Y_1 and Y_2 intersect transversely if $Y_1 \cap Y_2$ has a neighbourhood N homeomorphic to $Y_1 \cap Y_2 \times [-\varepsilon,\varepsilon]^2$ where $Y_i \cap N$ is mapped to $Y_1 \cap Y_2 \times p_i^{-1}(0)$ where $p_i : [-\varepsilon,\varepsilon]^2 \to [-\varepsilon,\varepsilon]$ is the canonical projection.

In the following proposition, $\#\pi_0(Y_1 \cap Y_2)$ denotes the number of connected components of $Y_1 \cap Y_2$.

Theorem 7.1. *Assume that $Y_1, Y_2 \subset X$ are two 2-sided subcomplexes, which intersect transversely, and let T_1, T_2 be the two dual trees, endowed with the action of $\pi_1(X)$. Then $i(T_1, T_2) \leq \#\pi_0(Y_1 \cap Y_2)$.*

Moreover, given two non-trivial actions of a group on simplicial trees T_1, T_2, there exists a complex X and $Y_1, Y_2 \subset X$ two 2-sided subcomplexes intersecting transversely such that $i(T_1, T_2) = \#\pi_0(Y_1 \cap Y_2)$.

Proof. Assume that T_Y is dual to $Y \subset X$. Then there is a continuous equivariant map $f : \tilde{X} \to T_Y$ defined by sending each connected component of $\tilde{Y} \times]-\varepsilon, \varepsilon[$ to an edge, and by sending each connected component of $\tilde{X} \setminus \tilde{Y} \times]-\varepsilon, \varepsilon[$ to a vertex. The main observation here is that the preimage of each point of T_Y under f is connected.

In our setting, denote by $f_i : \tilde{X} \to T_i$ the maps defined above, and let $F = (f_1, f_2)$. By corollary 5.3, $F(\tilde{X})$ contains $\mathcal{C}$ since $F(\tilde{X})$ is closed as a subcomplex of $T_1 \times T_2$. Since Y_1 and Y_2 intersect transversely, $Y_1 \cap Y_2$ has a neighbourhood homeomorphic to $Y_1 \cap Y_2 \times [-\varepsilon, \varepsilon]^2$, so F maps each connected component of $\tilde{Y}_1 \cap \tilde{Y}_2 \times [-\varepsilon, \varepsilon]$ to a 2-cell of $T_1 \times T_2$. Moreover, the preimage of the center of a 2-cell of $T_1 \times T_2$ is a connected component of $\tilde{Y}_1 \cap \tilde{Y}_2$. Therefore, the number of orbits of 2-cells in $F(\tilde{X})$ is bounded by the number of orbits of connected components of $\tilde{Y}_1 \cap \tilde{Y}_2$ so

$$\begin{array}{rclcl} i(T_1, T_2) & = & \#\{\text{2-cells of } \mathcal{C}/G\} & \leq & \#\{\text{2-cells of } F(\tilde{X})/G\} \\ & \leq & \#\ \pi_0(\tilde{Y}_1 \cap \tilde{Y}_2)/G & = & \#\pi_0(Y_1 \cap Y_2). \end{array}$$

We now prove that equality can achieved by constructing X, Y_1, Y_2 from $\hat{\mathcal{C}}$. Let $\tilde{X} = \hat{\mathcal{C}}$, let E_i be the set of midpoints of edges in T_i, and let $\tilde{Y}_i = \hat{\mathcal{C}} \cap p_i^{-1}(E_i)$. In the category of complexes of groups, one could take $Y_i = \tilde{Y}_i/G$ and $X = \tilde{X}/G$. However, we need to modify this construction to get free actions. Take A a simply connected complex on which G acts freely (for instance, a Cayley 2-complex). Let $\tilde{X}' = \hat{\mathcal{C}} \times A$ endowed with the diagonal action of G, and let $\tilde{Y}_i' = \tilde{Y}_i \times A$. Connected components of $\tilde{Y}_1' \cap \tilde{Y}_2'$ are of the form $x \times A$ where x is either the center of a 2-cell of $\mathcal{C}$, or the midpoint of the main diagonal of a maximal twice light rectangle in $\hat{\mathcal{C}}$. Thus, in the presence of twice light rectangles, we need to change E_i so that $\tilde{Y}_1' \cap \tilde{Y}_2'$ contains no point in the main diagonal of a twice light rectangle. To this means, one can keep E_1 unchanged, and take for E_2 an equivariant set of points meeting each edge of T_2 exactly once, but not containing the midpoint of any edge. With this modification, there is a one-to-one correspondance between connected components of $\tilde{Y}_1' \cap \tilde{Y}_2'$ and the 2-cells of $\mathcal{C}$. In particular, $\#\pi_0(\tilde{Y}_1' \cap \tilde{Y}_2')/G = i(T_1, T_2)$.

Let $X' = \tilde{X}'/G$ and $Y_i' = \tilde{Y}_i'/G$. Since $\tilde{X}'$ is simply connected and since the action of G on $\tilde{X}'$ is free, $\tilde{X}'$ is the universal cover of X' and $G \simeq \pi_1(\Sigma)$. Thus, T_i is dual to $Y_i' \subset X'$, and $i(T_1, T_2) = \#\pi_0(Y_1' \cap Y_2')$. $\square$

8 Core of geometric actions

The goal of this section is to produce a finite *fundamental domain* for the core of geometric actions in the following weak sense:

Theorem 8.1. *Let T_1, T_2 be geometric actions of a finitely generated group G on $\mathbb{R}$-trees.*

Then there is a set $D \subset T_1 \times T_2$, which is a finite union of compact rectangles, and such that $\mathcal{C}(T_1 \times T_2) \subset \overline{G.D}$.

Remember that a minimal action of a finitely generated group on a simplicial tree is geometric if and only if its edge stabilizers are finitely generated. Therefore, we get:

Corollary 8.2 ([Sco98]). *Let T_1, T_2 be two splittings of a finitely generated group G over finitely generated groups.*

Then $\mathcal{C}(T_1 \times T_2)/G$ is compact. In particular, $i(T_1, T_2)$ is finite.

In general, we will need a stronger assumption to deduce the finiteness of the intersection number:

Proposition 8.3. *Let T_1, T_2 be geometric actions of a* finitely presented *group G on $\mathbb{R}$-trees.*

Then $i(T_1, T_2)$ is finite.

The philosophy here is the following: we construct 2-complex X, with a cocompact action of G, with two measured foliations $\mathcal{F}_1, \mathcal{F}_2$ so that T_1 and T_2 are the leaf spaces made Hausdorff of those foliations. Now let $f_i : X \to T_i$ be the canonical projections and let $F = (f_1, f_2) : X \to T_1 \times T_2$. First, $F(X)$ in contained in the orbit of a finitely many rectangles. Now if points of T_i exactly coincide with leaves of $\mathcal{F}_i$, the fibers of f_i are connected and Corollary 5.3 implies that $\overline{F(X)}$ contains $\mathcal{C}$. In general, the connexity of fibers might fail, but we will get around this difficulty.

8.1 An example of infinite intersection number

To motivate this section, we first give an example of actions of a free group on simplicial trees T_1, T_2 such that $i(T_1, T_2)$ is infinite. This answers a question asked by Scott and Swarup in [SS00].

Lemma 8.4. *Let T_1 be a* free *minimal action of the free group $G = \langle a, b, c\rangle$ on a simplicial tree, for instance on its Cayley graph. Let H be a non-finitely generated subgroup of $\langle a, b\rangle$, and let T_2 be the Bass-Serre tree of the amalgam $G = \langle a, b\rangle *_H (H * \langle c\rangle)$.*

Then $i(T_1, T_2) = \infty$.

Proof. First $\mathcal{C}$ is nonempty and has no twice light rectangle; and by minimality $p_i(\mathcal{C}) = T_i$; now let e_2 be an edge of T_2 stabilized by H, and let $A = \mathcal{C} \cap p_2^{-1}(e_2)$. Since fibers are convex, A has the form $A_1 \times e_2$ where A_1 is a nonempty subtree of T_1. Note that the invariance of $\mathcal{C}$ implies that A_1 is H-invariant, and that two edges in A_1 are in the same H-orbit if and only if the corresponding rectangles of A are in the same G-orbit. Thus proving $i(T_1, T_2) = \infty$ consists in proving that A_1 has infinitely many H-orbits of edges. But the action of H on A_1 is free so H occurs as the fundamental group of the graph A_1/H, which cannot be finite since H is not finitely generated. □

8.2 Preliminaries about geometric actions

All the material in this section is borrowed from [LP97] where more details can be found. A *measured foliation* $\mathcal{F}$ on a 2-complex X consists of the choice, for each closed simplex σ of X of a (maybe constant) affine map $f_\sigma : \sigma \to \mathbb{R}$ defined up to post-composition by an isometry of $\mathbb{R}$, and such that is consistent under restriction to a face: if τ is a face of σ, then $f_\tau = \varphi \circ (f_\sigma)_{|\tau}$ for some isometry of φ of $\mathbb{R}$. Level sets of f_σ give a foliation on each closed simplex. We say simply a *foliated 2-complex* to mean a 2-complex endowed with a measured foliation. Leaves of the foliations on X are defined as the equivalence classes of the equivalence relation generated by the relation *x, y belong to a same closed simplex σ and $f_\sigma(x) = f_\sigma(y)$*. The transverse measure $\mu(c)$ of a path $c : [0, 1] \to \sigma$ transverse (resp. parallel) to the foliation is the length of the interval $f_\sigma(c([0, 1]))$. The transverse measure is invariant under the holonomy along the leaves. The transverse measure thus defines a metric on each transverse edge.

We say that map f from a simplex to an $\mathbb{R}$-tree T is *affine* if $f = i \circ f_a$ where $a : \sigma \to \mathbb{R}$ is an affine map, and $i : I \to T$ is an isometry defined on a convex subset $I \subset \mathbb{R}$ containing $a(\sigma)$. Given a 2-complex X and a map $f : X \to T$ which is affine in restriction to each simplex, there is a natural measured foliation $\mathcal{F}$ on X defined by the restrictions of f to the simplices of X. We call $\mathcal{F}$ the measured foliation induced by f.

If $c : [0, 1] \to X$ is a path wich is piecewise transverse or parallel to the foliation, we define $\mu(c)$ is the sum of the transverse measures of the pieces.

The pseudo-metric

$$\delta(x, y) = \inf\{\mu(c) \text{ for } c \text{ joining } x \text{ to } y\}$$

is zero on each leaf of X. By definition, the *leaf space made Hausdorff* $X/\mathcal{F}$ of X is the metric space obtained from X by making δ Hausdorff, i. e. by identifying points at pseudo-distance 0.

Theorem 8.5 ([LP97]). *Let $(X, \mathcal{F})$ be a foliated 2-complex. Assume that $\pi_1(X)$ is normally generated by free homotopy classes of curves contained in leaves.*

Then $X/\mathcal{F}$ is an $\mathbb{R}$-tree.

Remark. If f_σ is constant on σ, then σ is contained in a leaf. This means that contrary to [LP97], we allow 2-simplices to be contained in a leaf. By removing the interior of those 2-simplices (which does not change the leaf space made Hausdorff), one can reduce to the case considered by [LP97] (for one measured foliation). For two measured foliations, not allowing them would introduce unnecessary technical complications.

Definition 8.6 (Tree dual to a 2-complex, geometric action). *Consider a finitely generated group G acting on a tree T. We say that T is* dual *to a foliated 2-complex X endowed with an action of G if there is an equivariant isometry between T and $X/\mathcal{F}$ and if each transverse edge of X isometrically embeds into $X/\mathcal{F}$.*

Then T is geometric *if it is dual to a foliated 2-complex X such that the action of G on X is free, properly discontinuous, and cocompact.*

We call a *direct system* of actions on $\mathbb{R}$-trees a sequence of actions of finitely generated pairs $G_k \circlearrowright T_k$ and an action $G \circlearrowright T$, with epimorphisms $\varphi_k : G_k \to G_{k+1}$ and $\psi_k : G_k \to G$, and surjective φ_k-equivariant (resp. ψ_k-equivariant) morphisms of $\mathbb{R}$-trees $f_k : T_k \twoheadrightarrow T_{k+1}$ (resp. $g_k : T_k \twoheadrightarrow T$) such that the following diagram commutes:

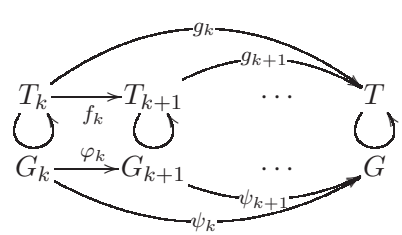

For convenience, we will use the notation $f_{kk'} = f_{k'-1} \circ \cdots \circ f_k : T_k \to T_{k'}$.

Definition 8.7 (Strong convergence). *We say that a direct system of minimal actions of finitely generated groups on $\mathbb{R}$-trees $G_k \circlearrowright T_k$ converges strongly to $G \circlearrowright T$ if*

- *G is the direct limit of the groups G_k*
- *for all finite tree $K \subset T_k$, there exists $k' \geq k$ such that $g_{k'}$ restricts to an isometry on $f_{kk'}(K)$,*

We now recall the definition of a *trivial* strong limit. If H is a countable group acting by isometries on a metric space T, denote by $\widehat{T/H}$ the metric space obtained by making Hausdorff the natural pseudo-metric hold by the quotient space T/H. A strong limit is *trivial* if for k large enough, the space $\widehat{T_k/\ker \psi_k}$ (which is naturally endowed with an action of G) is equivariantly isometric to T.

Theorem 8.8 ([LP97, Corollary 0.3]). *An action of a finitely generated group G on an $\mathbb{R}$-tree T is geometric if and only if every direct system converging strongly to T converges trivially.*

8.3 A technical preliminary result

The following lemma is a slight extension of the result of [LP97] saying that a geometric action is dual to a foliated 2-complex.

Lemma 8.9. *Consider a* geometric *action of a finitely generated group G on an $\mathbb{R}$-tree T, and let X be a 2-complex endowed with a free properly discontinuous cocompact action of G. Let $\mathcal{F}$ be a G-invariant measured foliation on X. Consider a map $f : X \to T$ which in constant on leaves of $\mathcal{F}$, and isometric in restriction to transverse edges of X.*

Then, there exists a 2-complex $\hat{X}$ containing X, endowed with a free properly discontinuous cocompact action of G, a measured foliation $\hat{\mathcal{F}}$ extending $\mathcal{F}$, and a map $\hat{f} : \hat{X} \to T$ extending f, which is constant on leaves of $\hat{\mathcal{F}}$, and which induces an isometry between $\hat{X}/\hat{\mathcal{F}}$ and T. Moreover, the inclusion $X \subset \hat{X}$ induces an epimorphism of fundamental groups.

Proof. The proof is essentially a rewording of [LP97]. We choose a large connected finite subgraph K in the 1-skeleton of X, and we describe a construction of a G-foliated space $(X_K, \mathcal{F}_K)$ containing X, and such that the map $X_K/\mathcal{F}_K \to T$ is an isometric embedding in restriction to the image of K.

First, note that the set $K_0 = f(K)$ is a finite tree (i. e. the convex hull of finitely many points), and has therefore a natural simplicial structure. We

can subdivide this simplicial structure so that for every vertex v of K, $f(v)$ is a vertex of K_0. Let C_K be the set obtained by coning off K as follows: glue $K \times [0,1]$ on K_0 via the map $K \times \{1\} \to K_0$ sending $(x,1)$ to $f(x)$. There is a natural measured foliation on C_K induced by the foliation $\{*\} \times [0,1]$ of $K \times [0,1]$. The set C_K can easily be turned into a simplicial complex whithout subdividing $K \times \{0\}$. Furthermore, the map $f : X \to T$ extends uniquely to $f_K : X_K \to T_K$ as a map constant on leaves and isometric in restriction to transverse edges.

Let $(X_K, \mathcal{F}_K)$ be the foliated 2-complex obtained by gluing on X the set $G \times C_K$ via the map $G \times K \times \{0\} \to X$ sending $(g,(x,0))$ to $g.x$. The set X_K has a natural free properly discontinous cocompact action of G, so X_K is a covering of $\overline{X}_K = X_K/G$. Let N_K be the image of $\pi_1(X_K)$ in $\pi_1(\overline{X}_K)$ so that $G \simeq \pi_1(\overline{X}_k)/N_K$. Note that if G is finitely presented, then one can choose K large enough so that $\pi_1(K)$ normally generates $\pi_1(X)$, which means in other words that $\tilde{X}_K$ is simply connected, and that $N_K = \{1\}$. Moreover, by construction, the image of K in $X_K/\mathcal{F}_K$ isometrically embeds into T.

The problem now is that $X_K/\mathcal{F}_K$ may not be an $\mathbb{R}$-tree. In view of Theorem 8.5, we would need that $\pi_1(X_K)$ is generated by free homotopy classes of curves contained in loops (note that this is automatically the case for K large enough if G is finitely presented since one can take X_K to be simply connected). This is why we are going to consider a Galois covering $\tilde{X}_K$ of $\overline{X}_K$ above X_K so that this condition is satisfied.

$$\begin{tikzcd}
\tilde{G}_K = \pi_1(\overline{X}_K)/\tilde{N}_k \arrow[r, phantom, "\circlearrowright"] \arrow[d] & \tilde{X}_k \arrow[d] \\
G = \pi_1(\overline{X}_K)/N_k \arrow[r, phantom, "\circlearrowright"] & X_k \arrow[d] \\
 & \overline{X}_k
\end{tikzcd}$$

Let $\tilde{N}_K \subset N_K$ be the normal subgroup of $\pi_1(\overline{X}_K)$ generated by free homotopy classes of curves contained in leaves and representing an element of N_K. Let $\tilde{X}_K$ be the Galois covering of $\overline{X}_K$ with deck group $G_K = \pi_1(\overline{X}_K)/\tilde{N}_K$. Let $\tilde{\mathcal{F}}_K$ be the lift of the measured foliation to $\tilde{X}$, and let $T_K = \tilde{X}_K/\tilde{\mathcal{F}}_K$ which is an $\mathbb{R}$-tree by Theorem 8.5. Denote by $\varphi_K : \tilde{G}_K \twoheadrightarrow G$ the natural epimorphism, and let $g_K : T_K \to T$ be the natural φ_k-equivariant map. The construction is natural with respect to inclusions $K \subset K'$: if $K \subset K'$, there is also a natural morphism $\varphi_{KK'} : G_K \twoheadrightarrow G_{K'}$, and a $\varphi_{KK'}$-equivariant morphism of $\mathbb{R}$-trees $g_{KK'} : T_K \to T_{K'}$.

First, it is clear that G is the direct limit of G_K (with respect to $\varphi_{KK'}$ and φ_K) since any relation of G is coned-off in X_K for K large enough. Moreover, by construction, T_K converges strongly to T. By the defining property of geometric actions, this convergence is trivial. In other words, then for K large enough, the natural map from $\widehat{T_K/\ker\varphi_K}$ to T is an isometry. But since $\tilde{X}_K/\ker\varphi_K = X_K$, one has $\widehat{T_K/H_K} = X_K/\mathcal{F}_K$ so this means that for K large enough, the map $g_K : X_K/\mathcal{F}_K \to T$ is an isometry. □

8.4 Two foliations on one complex

Consider a pair of geometric actions T_1, T_2. To exhibit a weak fundamental domain of $\mathcal{C}(T_1 \times T_2)$, our first step is to write T_1 and T_2 as the leaf space made Hausdorff of two measured foliations on a common space.

Proposition 8.10. *Let G be a finitely generated group with two geometric actions on $\mathbb{R}$-trees T_1, T_2.*

Then there is a connected 2-complex X with a free properly discontinuous cocompact action of G, and two invariant measured foliations $\mathcal{F}_1, \mathcal{F}_2$ on X such that for both $i \in \{1, 2\}$, T_i is dual to $\mathcal{F}_i$ in the sense of definition 8.6.

Moreover, if G is finitely presented, we may assume that X is simply connected.

Remeber that a map f from a simplex to an $\mathbb{R}$-tree T is *affine* if it is the composition of an affine map to $\mathbb{R}$ and of an isometry to T.

We will make use of the following standard fact for extending maps to $\mathbb{R}$-trees.

Fact 8.11. *Let X be a simplicial 2-complex, T an $\mathbb{R}$-tree, and let $f : X_0 \to T$ be a map defined on a sub-complex $X_0 \subset X$ containing the 1-skeletton of X, and such that f is affine in restriction to each edge.*

Then there exists a natural extension $\hat{f} : X \to T$ of f, and a natural subdivision of X which does not change the simplicial structure on X_0, and such that for each simplex $\sigma \subset X_0 \setminus X$ (in this new subdivision), $f_{|\sigma}$ is affine.

If a group G acts on both X and T so that f is equivariant, then the subdivision is equivariant, and $\hat{f}$ is equivariant.

Proof of the fact. Let τ be a simplex of $X_0 \setminus X$. We denote by e_1, e_2, e_3 the sides of τ, and by v_1, v_2, v_3 its vertices so that $v_i \notin e_i$. If $f(\partial\tau)$ contains no tripod (i. e. $f(\partial\tau)$ is contained in an arc of T), then f can be uniquely extended affinely on τ (without subdivision). Otherwise, let c be the center of the tripod $f(\partial\tau)$, and for $i \in \{1, 2, 3\}$, let b_i its (unique) preimage in

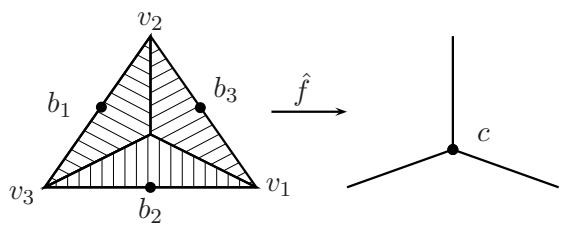

Figure 8: Extension of f

e_i. We now subdivide τ as follows: let b be the barycenter of $\{b_1, b_2, b_3\}$, and cut τ along the three segments $[v_i, b]$. We thus replace the triangle τ by one new vertex b, 3 new edges $[v_i, b]$, and three new triangles $\{v_i, v_j, b\}$. We define $\hat{f}(b) = c$ and extend $\hat{f}$ affinely on the new edges. But now, $\hat{f}$ maps the boundary of the new triangles to intervals, so $\hat{f}$ can be uniquely extended affinely on the new triangles. □

Proof of Proposition 8.10. Since T_1 is geometric, consider a foliated 2-complex X to which T_1 is dual; more precisely, let X having a free properly discontinuous cocompact action of G, endowed with an invariant measured foliation $\mathcal{F}_1$, such that T_1 is the leaf space made Hausdorff of $\mathcal{F}_1$, and such that transverse edges isometrically embed into T_1. Denote by $f_1 : X \to T_1$ the canonical map.

Note that if G is finitely presented, we can assume that $\pi_1(X)$ is generated by free homotopy classes of curves contained in leaves ([LP97, Remark 2.3]). In this case, by gluing finitely many orbits of triangles, and by extending f_1 according to Fact 8.11, one can assume that X is simply connected. One has that T_1 is dual to the new foliation on X because one has two 1-Lipschitz maps

$$(X/\mathcal{F}_1)_{\text{old}} \to (X/\mathcal{F}_1)_{\text{new}} \to T_1$$

such that the composed map $(X/\mathcal{F}_1)_{\text{old}} \to T_1$ is an isometry, which forces the two maps to be isometries.

We now define an equivariant map $f : X \to T_2$. First, choose an arbitrary equivariant map on the 0-skeletton (this is possible because the action is free on X). Now extend f affinely on the 1-skeletton, and use the fact above to extend f on the 2 skeletton (after a subdivision of X). Let $\mathcal{F}_2$ be the measured foliation on X induced by f.

Lemma 8.9 shows how to equivariantly enlarge the foliated 2-complex $(X, \mathcal{F}_2)$ to a larger 2-complex $(\hat{X}, \hat{\mathcal{F}}_2)$ containing X, such that the restriction of $\hat{\mathcal{F}}_2$ on X coincides with $\mathcal{F}_2$, and such that T_2 is dual to $(\hat{X}, \hat{\mathcal{F}}_2)$. If G is finitely presented, since the inclusion $X \subset \hat{X}$ induces a epimorphism of fundamental groups, we have that $\hat{X}$ is simply connected.

We now extend f_1 and $\mathcal{F}_1$ to $\hat{X}$: first, define $\hat{f}_1$ on the set of vertices of $\hat{X} \setminus X$ in any equivariant way, and extend $\hat{f}_1$ to the edges of $\hat{X} \setminus X$ affinely; using fact 8.11, extend f_1 and $\hat{\mathcal{F}}_1$ and to the 2-cells of $\hat{X} \setminus X$ using fact 8.11. Since we have natural equivariant 1-Lipschitz maps $X/\mathcal{F}_1 \to \hat{X}/\hat{\mathcal{F}}_1 \to T_1$, and since $X/\mathcal{F}_1 \to T_1$ is an isometry onto T_1, one gets that $\hat{X}/\hat{\mathcal{F}}_1$ is equivariantly isometric to T_1. □

8.5 A weak fundamental domain

We now prove the existence of a weak fundamental domain.

Proof of Theorem 8.1. Let $X, \mathcal{F}_1, \mathcal{F}_2$ be a 2-complex with two measured foliations as described in Proposition 8.10 above. Let $f_i : X \to T_i$ given by the composition of the quotient map $X \to X/\mathcal{F}_i$ and the equivariant isometry $X/\mathcal{F}_i \to T_i$. Let $F = (f_1, f_2) : X \to T_1 \times T_2$. Clearly, $F(X)$ is connected and G-invariant. Moreover, the image of each simplex of X is contained in a rectangle. Since X has finitely many orbits of simplices, $F(X)$ is contained in $G.D$ where D is a finite union of rectangles in $T_1 \times T_2$.

Now, the idea is essentially that $F(X)$ should have connected fibers because a fiber should coincide with the image of a leaf. However, this is not completely true because points of $X/\mathcal{F}_i$ do not always coincide with leaves of X (we have to *make the space of leaves Hausdorff*). However, by definition of the metric on $X/\mathcal{F}_i$, the following *weak connexity of fibers* holds:

Definition 8.12 (Weak connexity of fibers). *Say that a subset $F \subset T_1 \times T_2$ has the* weakly connected fibers *if for all $a, b \in F$ such that $p_i(a) = p_i(b)$, and for each $\varepsilon > 0$, there exists a path $c : [0,1] \to F$ joining a to b in F and such that $p_i \circ c([0,1])$ is contained in the ε-neighbourhood of $p_i(a)$.*

In view of the characterization of $\mathcal{C}$ (Proposition 5.1, the Theorem follows from the following fact. □

Fact 8.13. *Let $F \subset T_1 \times T_2$ be a connected set enjoying the weak connexity of fibers. Then its closure $\overline{F}$ has convex fibers.*

Proof. Let F_V be the union of the convex hulls of the vertical fibers of F. Of course, vertical fibers of F_V are convex. We have $F_V \subset \overline{F}$. Indeed, let $x \in F_V \setminus F$ so that x lies in a vertical segment $\{x_1\} \times [a_2, b_2]$ whose enpoints are in F. Let $\varepsilon > 0$ and c be a path in F joining (x_1, a_2) to (x_1, b_2), and such that $p_1 \circ c$ is contained in the ε-neighbourhood of $\{x_1\}$. Then $p_2 \circ c([0,1])$ must contain x_2. This implies that x lies in the closure of its horizontal

fiber $F \cap T_1 \times \{x_2\}$, and in particular that $F_V \subset \overline{F}$. This also implies that connected horizontal fibers of F stay connected in F_V, that F_V is connected and still satisfies the weak connexity of (horizontal) fibers.

Now let $F_{V,H}$ be the union of the convex hulls of the horizontal fibers of F_V. The symmetric argument shows that horizontal and vertical fibers of $F_{V,H}$ are convex, and that $F_{V,H} \subset \overline{F}$. Corollary 5.5 concludes that $\overline{F}$ has convex fibers. □

8.6 Finiteness of intersection number

We now prove the finiteness of the intersection number of two geometric actions of a finitely presented group.

Proof of Proposition 8.3. Let $X, \mathcal{F}_1, \mathcal{F}_2$ be a 2-complex with two measured foliations such that $X/\mathcal{F}_i$ is equivariantly isometric to $X/\mathcal{F}_i \to T_i$ as described in Proposition 8.10. Let $f_i : X \to T_i$ given by the composition of the quotient map $X \to X/\mathcal{F}_i$ and the equivariant isometry $X/\mathcal{F}_i \to T_i$. Let $F = (f_1, f_2) : X \to T_1 \times T_2$.

Since G is finitely presented, we can assume that X is simply connected. Therefore, we can apply Lemma 3.4 of [LP97] which claims that the natural maps from the set of leaves of $\mathcal{F}_i$ to $X/\mathcal{F}_i$ is one-to-one outside a countable set. In particular, all but countably many fibers of $F(X)$ are connected. Finally, $F(X)$ is connected, G-invariant and contained $G.D$ where D is a finite union of rectangles in $T_1 \times T_2$. The proposition then follows from Lemma 8.14. □

Lemma 8.14. *Let $F \subset T_1 \times T_2$ be a connected set, enjoying the weak connexity of fibers. Assume that all but countably many horizontal and vertical fibers of F are convex.*

Then $\overline{F}$ have convex fibers and $\overline{F} \setminus F$ has measure 0.

Proof. The first assertion follows from Fact 8.13. Let F_V be the union of the convex hulls of the vertical fibers of F. Since $F_V \setminus F$ is contained in countably many fibers, it has null measure. Moreover, the proof of Fact 8.13 shows that connected horizontal fibers of F stay connected in F_V, so all but countably many F_V horizontal fibers of F_V are connected. Now let $F_{V,H}$ be the union of the convex hulls of the horizontal fibers of F_V. The symmetric argument shows that horizontal and vertical fibers of $F_{V,H}$ are convex. Since $F_{V,H} \setminus F$ has null measure, the lemma is a consequence of the following lemma. □

Lemma 8.15. *Let $F \subset T_1 \times T_2$ be a connected set with convex fibers. Then $\overline{F} \setminus F$ has measure* 0.

Proof. We have to prove that the trace of $\overline{F} \setminus F$ on each compact rectangle has measure zero. Let R_0 be a compact rectangle, and let $J_i = p_i(\overline{F} \cap R_0)$. Let $R = J_1 \times J_2$. Since $\overline{F} \cap R_0 \subset R$, we have to prove that $(\overline{F} \setminus F) \cap R$ has measure 0. By Lemma 5.4, $\overline{F}$ is the complement of a union of quadrants. By changing T_1 and T_2 to $p_1(\overline{F})$ and $p_2(\overline{F})$, we may also assume that $p_i(\overline{F}) = T_i$. Thus, one can apply lemma 4.18 saying that the semi-flow φ_t contracting $T_1 \times T_2$ onto $\overline{F}$ is well defined and that R is φ_t-invariant.

We now prove that $\overline{F} \setminus F$ is contained in $\varphi_\infty(\partial R)$. Since φ_∞ is a Lipschitz map, this will conclude the proof of the fact. Let $x = (x_1, x_2) \in (\overline{F} \setminus F) \cap R$. We can assume that $x \notin \partial R$. Consider the four open rectangles obtained from R by subdividing R vertically and horizontally at x. At least one of those open rectangles, call it S, does not intersect $\overline{F}$, since otherwise, F would intersect the corresponding four quadrants, which would imply $x \in F$ by Fact 5.6. Starting from x, one can follow in S the semi-flow φ_t backwards until we reach the boundary of R at a point x_0, so that $\varphi_{t_0}(x_0) = x$ for some $t_0 \in \mathbb{R}_+$. Now $\varphi_\infty(x_0) = \varphi_\infty(x) = x$ since $x \in \overline{F}$. □

9 Application to automorphisms of free groups

In this section, we study in more detail the case of attracting and repulsive trees of an outer automorphism of a free group G.

Our starting point is the following theorem due to Levitt and Lustig:

Theorem 9.1 (Levitt-Lustig). *Let α be an automorphism of a finitely generated free group G. Then there exists two actions of G on $\mathbb{R}$-trees T_1, T_2 and two homotheties $h_1 : T_1 \to T_1$, and $h_2 : T_2 \to T_2$ with stretching fators λ_1, λ_2 such that*

- *h_i is α-equivariant (i. e. $h_i(g.x) = \alpha(g).h_i(x)$)*
- *$\lambda_1 \geq 1$, $\lambda_2 \leq 1$*
- *the action of G on T_i has trivial arc fixators*
- *$g \in G$ is elliptic in T_1 if and only if it is elliptic in T_2*
- *There exists $\eta > 0$ such that if $l_{T_1}(g) + l_{T_2}(g) \leq \eta$, then g is elliptic in T_1 and T_2 (so $l_{T_1}(g) + l_{T_2}(g) = 0$).*

Note that this implies that the action of G on $T_1 \times T_2$ is discrete. Say that an automorphism α is irreducible with irreducible powers (*iwip*) no free factor of G is periodic under α up to conjugacy. The theorem above was

proved for iwip automorphisms in [Lus] and [BFH97b, BFH97a]. Moreover, in this case, either the action of G on T_1 and T_2 is free, or α is induced by a pseudo-ansov homeomorphism of a surface with boundary.

The goal of this section is the following theorem.

Theorem 9.2. *Let α be an automorphism of a finitely generated free group G, and let T_1, T_2 be as above. Assume that the actions of G on T_1 and T_2 are geometric, and that $\lambda_1 > 1$. Then there is a G-invariant, cofinite (discrete) set $\mathcal{S} \subset \mathcal{C}$ such that*

- *$\mathcal{C}$ has a structure of simplicial complex, and $\mathcal{C} \setminus \mathcal{S}$ is a surface*
- *the link in $\mathcal{C}$ of each point of $\mathcal{S}$ is a disjoint union of lines and circles*
- *the action of G on $\mathcal{C}$ is discrete and cocompact, and it is properly discontinuous on $\mathcal{C} \setminus \mathcal{S}$*
- *$\Sigma = \mathcal{C}/G$ is a* pinched *compact surface, and $\Sigma \setminus (\mathcal{S}/G)$ is a surface with finitely many puntures*
- *Σ has two transverse measured foliations $\mathcal{F}_1, \mathcal{F}_2$, and the map $H = (h_1, h_2)$ induces a homeomorphism of Σ preserving $\mathcal{S}/G$, preserving both foliations, and which multiplies the transverse measure of $\mathcal{F}_i$ by λ_i, and $\lambda_2 = 1/\lambda_1$.*

In this theorem, a *pinched surface* is a space obtained from a compact surface by collapsing to a point finitely many finite sets. Equivalently, this is a finite 2-complex in which the link of every vertex is a finite disjoint union of circles.

Corollary 9.3. *Assume that α is irreducible with irreducible powers. If T_1 and T_2 are both geometric, then α is induced by a pseudo-anosov homeomorphism of a surface with boundary.*

9.1 A structure of 2-complex

By Theorem 8.1, there is a weak fundamental domain for $\mathcal{C}$: there is a finite set of rectangles $\mathcal{D}$ such that, the closure of the set $X = \bigcup_{R \in \mathcal{D}, g \in G} g.R$ is connected and has convex fibers, which implies that $\mathcal{C} \subset \overline{X}$.

Our first goal is to prove that X has a G-invariant structure of 2-complex, and that the action of G on X is properly discontinuous outside $\mathcal{S}_0$ (Corollary 9.11).

First, $\mathcal{C}$ is non-empty since T_1 and T_2 are necessarily irreducible. Moreover, there is no twice light rectangle: indeed, since there is no arc in T_1 containing no branch point since the image of such an arc under h_1 would

give arbitrarily large such arcs, which is not possible since by minimality, there is a finite tree whose translates under G cover T_1.

On $T_1 \times T_2$, we use the distance $d((x_1, x_2), (y_1, y_2)) = d_{T_1}(x_1, y_1) + d_{T_2}(x_2, y_2)$. We also denote $l(g) = l_{T_1}(g) + l_{T_2}(g)$. Let η such that $l(g) < \eta \Rightarrow l(g) = 0$. Denote by $\mathcal{S}_0 \subset T_1 \times T_2$ the set of points having a non-trivial stabilizer under the action of G.

Lemma 9.4. *Any two distinct points $x, x' \in \mathcal{S}_0$ are at distance at least $\eta/2$.*

Proof. let $g, g' \in G \setminus \{1\}$ fixing x and x' respectively. Since arc fixators are trivial, $\operatorname{Fix} g$ and $\operatorname{Fix} g'$ are reduced to a point in both T_1 and T_2. But the translation length of gg' in T_i is $2d_{T_i}(\operatorname{Fix} g, \operatorname{Fix} g')$. Therefore, $l(gg') = 2d(x, x')$, and by hypothesis, we get $d(x, x') = 0$ or $d(x, x') > \eta/2$. □

Lemma 9.5. *If $d(x, g.x) < \eta$ then g has a fix point y such that $d(x, y) = d(x, g.x)/2$.*

Proof. Since $d(x, g.x) < \eta$, $l(g) < \eta$ so g is elliptic in T_1 and T_2. This implies that g fixes the midpoint of $[x_i, g.x_i]$ in T_i. □

Lemma 9.6. *The set X is closed in $T_1 \times T_2$.*

Proof. Let $x = (x_1, x_2) \in \overline{X}$, and consider a sequence x_i in $\bigcup_{R \in \mathcal{D}} R$ and a sequence $g_i \in G$ such that $g_i.x_i$ converges to x. Up to extracting a subsequence, we can also assume that x_i converges to $a = (a_1, a_2)$. This implies that $g_i.a$ converges to x. If for some i and infinitely many $j > i$, $g_j g_i^{-1} = 1$, then $x \in X$, and we are done. Otherwise, given $\varepsilon > 0$, for i large enough and all $j > i$, $g_j g_i^{-1}$ moves the point $g_i.a$, and thus x by less that ε. Therefore, all the elements $g_j g_i^{-1}$ have a common fix point $b = (b_1, b_2) \in \mathcal{S}_0$ with $d(b, x) \leq \varepsilon$. Since this is valid for all $\varepsilon > 0$, one gets $b = x$. Therefore, $d(g_j.a, x)$ is constant so it must be 0, and $x \in X$. □

From now on, we subdivide $\mathcal{D}$ so that each rectangle $R \in \mathcal{D}$ has diameter at most $\eta/10$, and so that $R \cap \mathcal{S}_0$ is either empty or consists of a single corner of R.

Lemma 9.7. *$X \setminus \mathcal{S}_0$ is locally compact, and G acts properly discontinuously on $X \setminus \mathcal{S}_0$.*

More precisely, every point of $X \setminus \mathcal{S}_0$ has a neighbourhood V such that for each $R \in \mathcal{D}$, there is at most one $g \in G$ such that $g.R$ intersects V.

Proof. Clearly, the second part of the statement implies the fact that $X \backslash \mathcal{S}_0$ is locally compact and that the action of G on $X \backslash \mathcal{S}_0$ is properly discontinuous.

Let $x \notin \mathcal{S}_0$ and let $V = V_1 \times V_2$ be a product of balls around x of radius at most $\eta/10$ and such that V does not intersect $\mathcal{S}_0$. Fix a rectangle $R \in \mathcal{D}$ and assume that $g_1.R$, $g_2.R$ intersect V for some $g_1 \neq g_2 \in G$. Then $h = g_2 g_1^{-1}$ moves a point of $g_2.R \cap V$ by at most $\eta/2$, so h has a fix point $y = (y_1, y_2)$ at distance at most $\eta/2$ of x. Since R meets $\mathcal{S}_0$ only at corners of R, $g_1.R$ is contained in a quadrant $\delta_1 \times \delta_2$ based at y. Now since $y \notin V$, one may assume that $y_1 \notin V_1$, so V_1 is contained in δ_1. Since the action of $\mathrm{Stab}\{y_1\}$ on the set of directions based at y_1 is free, $p_1(h.R) \subset h.\delta_1$ implies that $h.R$ does not intersect V. □

Lemma 9.8. *There is a subdivision of $\mathcal{D}$ and a G-invariant cofinite set $\mathcal{S}$ such that*

- *two rectangles of $G.\mathcal{D}$ either coincide or intersect in a (maybe degenerate or empty) interval, contained in a horizontal or vertical side of R, and whose endpoints are in $\mathcal{S}$;*
- *for each rectangle $R \in \mathcal{D}$, $\overset{\circ}{R}$ is open in X*

Moreover, X has a G-equivariant structure of a simplicial complex with finitely many orbits of cells, and whose vertex set is $\mathcal{S}$.

Remark. The rectangles of $\mathcal{D}$ don't make X a rectangle complex. In general, there is no decomposition of X as a rectangle complex whose sides are vertical and horizontal, as can be seen in the torus endowed with two irrational foliations.

Proof. For each rectangle $R = I_1 \times I_2 \in \mathcal{D}$, let $\mathcal{I}(R)$ be the (finite) set of translates of rectangles $R' \in \mathcal{D}$ which intersect R in a non-degenerate rectangle. Let $\mathcal{I}_i(R) \subset I_i$ be the finite set of endpoints of the projections on I_i of the rectangles $R \cap R'$ for $R' \in \mathcal{I}(R)$. After subdividing each rectangle $R = I_1 \times I_2 \in \mathcal{D}$ along $\mathcal{I}_1(R) \times I_2 \cup I_1 \times \mathcal{I}_1(R)$, one gets that $g.R' \cap R$ is a segment or a point whenever $g.R' \neq R$.

Let $\mathcal{S}$ be the set of points of X occuring as an endpoint (or a corner) of the intersection of two elements of $G.\mathcal{D}$. Clearly, $\mathcal{S}_0 \subset \mathcal{S}$, and $\mathcal{S}$ intersects each rectangle of $\mathcal{D}$ in a finite set so $\mathcal{S}/G$ is finite.

The fact that $\overset{\circ}{R}$ is open in X follows from the fact that two rectangles intersect only in their boundary and that a point of $\overset{\circ}{R}$ has a neighbourhood intersecting only finitely many rectangles.

Finally, we triangulate X as follows: given $R \in \mathcal{D}$, choose a triangulation of R whose vertex set is $R \cap \mathcal{S}$ (this contains the corners of R). Since given $R, R' \in \mathcal{D}$ there is at most one element $g \in G$ such that $g.R = R'$, this triangulation can be chosen so that it extends G-equivariantly to X. $\square$

9.2 The core as a subcomplex

In this section, we prove that up to subdividing our structure of 2-complex on X, $\mathcal{C}$ appears as a subcomplex of X.

Roughly speaking, the following lemma says that X cannot go in a direction branching from the interior of a rectangle.

Lemma 9.9. *Let $R \in \mathcal{D}$, let $x \in \overset{\circ}{R}$, and let Q be a quadrant based at x, disjoint from R. Then Q is disjoint from X.*

Proof. Assume on the contrary that there is a point $y = (y_1, y_2) \in X \cap Q$. Write $Q = \delta_1 \times \delta_2$, and let (b_1, b_2) be the base point of Q. Choose a path $c = (c_1, c_2) : [0, 1] \to X$ joining y to x in X, and let t_0 be the first time for which one coordinate of $c(t_0)$ equals b_1 or b_2. Note that for $t < t_0$, $c(t) \notin R$. Since $\overset{\circ}{R}$ is open in X, $c(t_0) \neq (b_1, b_2)$. So assume for instance that $c_1(t_0) = b_1$ and $c_2(t_0) \in \eta_2$. By convexity of fibers of X, $\{b_1\} \times [b_2, c_2(t_0)] \subset X$, which contradicts the fact that $\overset{\circ}{R}$ is open in X. $\square$

We now study how $\mathcal{C}$ may intersect rectangles of $\mathcal{D}$.

Lemma 9.10. *One can subdivide equivariantly each rectangle of $\mathcal{D}$ into smaller subrectangles such that for all $R \in \mathcal{D}$, either $R \subset \mathcal{C}$ or $R \cap \mathcal{C} \subset \partial R$.*

Proof. Let $R \in \mathcal{D}$ be a rectangle which is not contained in $\mathcal{C}$. We are going to prove that $\mathcal{C} \cap R$ can be obtained from R by removing a finite number of quadrants. The lemma will follow easily after subdivision of R.

Let Q be a light quadrant. Then one of the following holds:

1. either $\overset{\circ}{R} \subset Q$, or $R \cap Q = \emptyset$
2. or $R \cap Q$ is an open half rectangle
3. or $R \cap Q$ contains exactly one corner of R

We are not interested in quadrants of type 1. We also can assume that up to subdividing R, we can avoid quadrants of type 2. Indeed, let I be a side of R, and let $L_I \subset R$ be the union of the traces on R of all light quadrants of type 2 containing I. If L_I contains $\overset{\circ}{R}$, then $\mathcal{C}$ does not intersect $\overset{\circ}{R}$ and

we are done. Otherwise, we can cut R into $\overline{L}_I$ and $R \setminus L_I$. Doing this for the four sides of R, we can avoid the occurence of quadrants of type 2.

Note that a quadrant of type 3 is necessarily based at a point $x \in R$. Now let $c = (c_1, c_2)$ be a corner of R, and let L_c be the unions of the traces on R of all light quadrants of type 3 containing c, and assume that $L_c \neq \emptyset$. We are going to prove that L_c is itself the trace of a light quadrant of type 3. The lemma will follow since $R \cap \mathcal{C}$ will be obtained from $\mathcal{C}$ by removing at most 4 quadrants.

Denote by $]a, c] =]a_1, c_2] \times \{c_2\}$ and $]b, c] = \{c_1\} \times]b_2, c_2]$ the intersection of L_c with the two sides of R containing c. Let $P = \rho_1 \times \rho_2$ be the quadrant based at (a_1, b_2) and containing c. Clearly, any light quadrant $Q = \delta_1 \times \delta_2$ of type 3 is contained in P: for instance, $a \notin Q$ and $c \in Q$ implies that $\delta_1 \subset \rho_1$. Thus $L_c \subset P$.

We now prove the other inclusion. Let $x = (x_1, x_2) \in P$. Since $x_1 \in]a_1, c_1]$, by definition of a, there exists a light quadrant $Q = \delta_1 \times \delta_2$ with $x_1 \in \delta_1$. Similarly, there exists a light quadrant $Q' = \delta'_1 \times \delta'_2$ with $x_2 \in \delta'_2$. It suffices to prove that the quadrant $Q'' = \delta_1 \times \delta'_2$ is light. We choose a base point $* \in X$, and consider a sequence $g_k.* \in Q''$ making Q'' heavy. Then for k large enough, $g_k.* \notin Q$, $g_k.* \notin Q'$ and $g_k.* \notin R$. It follows that $g_k.*$ lies in a quadrant branching from R as in the previous lemma. Since $g_k.* \in X$, this is a contradiction. □

Let $\mathcal{D}'$ be the set of rectangles $R \in \mathcal{D}$ which are contained in $\mathcal{D}$ together with the set of horizontal or vertical intervals obtained as the trace of $\mathcal{C}$ on the boundary of those rectangles (we think of those segments as degenerate rectangles).

Using a triangulation as in Lemma 9.8, we immediately get the following corollary:

Corollary 9.11. *The core $\mathcal{C}$ of $T_1 \times T_2$ has a G-invariant structure of 2-complex, $\mathcal{C} \setminus \mathcal{S}_0$ is locally compact, and the action of G on $\mathcal{C} \setminus \mathcal{S}_0$ is properly discontinuous.*

9.3 Singular points of the core

We now study the 2-complex $\Sigma = \mathcal{C}/G$, and prove that it's a pinched surface. This will conclude the proof of Theorem 9.2. To this means, we are going use the map $H = (h_1, h_2) : T_1 \times T_2 \to T_1 \times T_2$.

Lemma 9.12. *The core $\mathcal{C}$ is H-invariant. Moreover, H induces an homeomorphism $\overline{H}$ of Σ, and $\lambda_1 \lambda_2 = 1$.*

Note that two projections $p_i : \mathcal{C} \to T_i$ induce two natural measured foliations on $\mathcal{C}$ and Σ, which are preserved by H and $\overline{H}$ respectively. Moreover, $\overline{H}$ expands the corresponding transverse measures by a factor λ_2 and λ_1 respectively.

Proof. The first part follows from the fact that H sends quadrant to quadrant, or from the characterization of $\mathcal{C}$. Moreover, x and y are in the same G-orbit if and only if $H(x)$ and $H(y)$ are. The transverse measures of the two foliations on Σ define a finite non-zero measure on Σ: if the measure was 0, then $\mathcal{C}$ would be a simplicial tree, implying that T_1 and T_2 are both simplicial, which is impossible since $\lambda_1 \neq 1$. Since $\overline{H}$ expands this measure by a factor $\lambda_1\lambda_2$, it follows that $\lambda_1\lambda_2 = 1$. □

Let $\mathcal{S}$ be the set of points of $\mathcal{C}$ occuring as an endpoint (or a corner) of the intersection of two elements of $G.\mathcal{D}'$. Let $\overline{\mathcal{S}}$ be its image in Σ.

Lemma 9.13. *$\mathcal{C} \setminus \mathcal{S}$ is a surface, and the link of each point of $\mathcal{S}$ in $\mathcal{C}$ is a disjoint union of circles and lines. Moreover, $\Sigma \setminus \overline{\mathcal{S}}$ is a closed surface with finitely many punctures, and Σ is a pinched surface.*

Proof. Each point in $\mathcal{C} \setminus \mathcal{S}$ has a neighbourhood of the form $I_1 \times K_2$ or $K_1 \times I_2$ where $K_i \subset T_i$ is a finite subtree and $I_i \subset T_i$ is a compact segment. Let $\mathcal{S}_H$ (resp. $\mathcal{S}_V$) be the *horizontal* (resp. *vertical*) *singular set* defined as the set of points $x \in \mathcal{C} \setminus \mathcal{S}$ having a neighbourhood of the form $K_1 \times I_2$ (resp. $I_1 \times K_2$) but no neighbourhood of the form $I_1 \times I_2$.

We aim to prove that $\mathcal{S}_H$ and $\mathcal{S}_V$ are empty. The image $\overline{\mathcal{S}}_H$ of $\mathcal{S}_H$ in Σ is a finite union of horizontal open edges, and has therefore a finite horizontal transverse measure, which is non-zero if $\mathcal{S}_H \neq \emptyset$. Now the homeomorphism $\overline{H}$ preserves $\mathcal{S}_H$ and expands its horizontal transverse measure by $\lambda_1 > 1$. This only allows $\mathcal{S}_H = \emptyset$. Similarly, $\mathcal{S}_V = \emptyset$, so $\mathcal{C} \setminus \mathcal{S}$ is a surface.

Since the action of G on $\mathcal{C} \setminus \mathcal{S}$ is free and properly discontinuous, this implies that $\Sigma \setminus \overline{\mathcal{S}}$ is a surface. Therefore, the link at any point in $\overline{\mathcal{S}}$ is a graph having only valence 2-vertices. Since it is compact, it is a finite disjoint union of circles. It follows that $\Sigma \setminus \overline{\mathcal{C}}$ is a closed surface with finitely many punctures, and that Σ is a pinched surface. Similarly, the link in $\mathcal{C}$ of any point of $\mathcal{S}$ is a disjoint union of lines and circles. □

Theorem 9.2 follows.

9.4 The case of an irreducible automorphism with irreducible powers

We prove here Corollary 9.3, i. e. that if α does not preserve any free factor of G up to conjugacy, and if T_1 and T_2 are geometric, then α is induced by a pseudo-Anosov automorphism on a surface with boundary.

Proof of Corollary 9.3. We make use the fact that if α is not induced by a pseudo-Anosov automorphism on a surface with boundary, then the actions of G on T_1 and T_2 are free ([BH92]). We assume that T_1 and T_2 are geometric and argue towards a contradiction. Since the action on T_1 and T_2 is free, $\mathcal{C}$ is the universal cover of Σ, and $G \simeq \pi_1(\Sigma)$.

Up to removing some points from $\overline{\mathcal{S}}$, we can assume that the link of each point of $\overline{\mathcal{S}}$ is not a circle. If $\mathcal{S} = \emptyset$ we have a contradiction as G is a not a surface group. Let $\hat{\Sigma}$ be the 2-complex obtained by blowing-up Σ as follows: for each vertex $v \in \overline{\mathcal{S}}$, consider the tree T_v defined as the complete bipartite graph on $\{v\}$ and $C(v)$ where $C(v)$ is the set of connected components of the link of v; then glue back $C(v)$ to $\sigma \setminus \overline{\mathcal{S}}$. What we get is a (maybe not connected) surface together with a finite collection of finite trees attached to finitely many points. Note that $\hat{\Sigma}$ is homotopy equivalent to Σ. However, since G contains no non-trivial surface group (G is free), all those surfaces are spheres. But this contradicts the fact that the universal covering $\mathcal{C}$ of Σ is contractible. $\square$

10 Equality with Scott and Swarup's intersection number

Let T_1 and T_2 be two actions of a finitely generated group G on simplicial trees with one orbit of edges. Scott defined in [Sco98] the intersection number of T_1 and T_2. One can reword the definition as follows. Choose e_1, e_2 two oriented edges in T_1 and T_2. Let $\delta(e_i) \subset T_i$ be the direction based at the origin of e_i, and containing e_i. Let H_i be the stabilizer of e_i which is also the stabilizer of $\delta(e_i)$. Fix a base point $*_i \in T_i$. Let $X_{e_i} = \{g \in G | g.*_i \in \delta(e_i)\}$. X_{e_i} is clearly left invariant under H_i. Let C be a Cayley graph of G. In Scott's terminology, X_{e_i} is a H_i-almost invariant set, which means that X_{e_i}/H_i has a finite coboundary in the graph C/H_i. Note that changing the basepoint above only changes X_{e_i}/H_i by a finite set, and such a change will be not be important in the following definitions.

Scott says that X_{e_1} and X_{e_2} *cross* if the four sets $X_{e_1} \cap X_{e_2}$, $X^*_{e_1} \cap X_{e_2}$, $X_{e_1} \cap X^*_{e_2}$, $X^*_{e_1} \cap X^*_{e_2}$ project to infinite sets in C/H_1. They prove that this

occurs if and only if those four sets also project to infinite sets in C/H_2. Note that the fact that X_{e_1} crosses X_{e_2} does not change if we replace one edge with the edge with the reverse orientation. Moreover, X_{e_1} crosses X_{e_2} if and only if $X_{g.e_1}$ crosses $X_{g.e_2}$.

Finally, $i(T_1, T_2)$ is defined as the number of double cosets $H_1 g H_2$ such that X_{e_1} crosses $g.X_{e_2}$. Now the set of double cosets is in one-to-one correspondance with the set of orbits of pairs of non-oriented edges in $T_1 \times T_2$. In other words, $i(T_1, T_2)$ is the number of orbits pairs of non-oriented edges (e_1, e_2) in $T_1 \times T_2$ such that X_{e_1} crosses X_{e_2}.

Proposition 10.1. *Our definition of the intersection number coincides with Scott's definition.*

Proof. To identify our definition of intersection number with Scott's one, we just need to check that a rectangle $e_1 \times e_2$ is contained in $\mathcal{C}$ if and only if X_{e_1} and X_{e_2} cross. Denote by $Q(e_1, e_2)$ the quadrant $\delta(e_1) \times \delta(e_2)$.

Assume first that X_{e_1} does not cross X_{e_2}, and let's prove that $e_1 \times e_2$ is not contained in $\mathcal{C}$. Up to a good choice of orientations of e_1 and e_2, one gets that the image of $X_{e_1} \cap X_{e_2}$ projects to a finite set in G/H_1. This means that the set $Z = \{g. *_1 \,|g.(*_1, *_2) \in Q(e_1, e_2)\}$ meets only finitely many H_1-orbits. In particular, Z is bounded, so $Q(e_1, e_2)$ is light. Since the open rectangle $e_1 \times e_2$ is contained in $Q(e_1, e_2)$, we get that $e_1 \times e_2$ is not contained in $\mathcal{C}$.

For the converse, assume that X_{e_1} cross X_{e_2}, and let's check that the rectangle $e_1 \times e_2$ lies in $\mathcal{C}$. We first treat the case where $\mathcal{C}$ is non-empty, and we choose a base point $* \in \mathcal{C}$. Assume by contradiction that there is a light quadrant Q containing $e_1 \times e_2$. In this case, there is a choice of orientations of e_1 and e_2 such that Q contains $Q(e_1, e_2)$. In particular, $Q(e_1, e_2)$ is light. But since X_{e_1} crosses X_{e_2} there is an element $g \in G$ sending $*$ in $Q(e_1, e_2)$. Since $Q(e_1, e_2)$ is light, this contradicts the fact that $g.* \in \mathcal{C}$.

We now check that if $\mathcal{C}$ is empty, then Scott's intersection number is zero. We want to prove that for each pair of non-oriented edges (e_1, e_2), X_{e_1} does not cross X_{e_2}. This is easy for homothetic actions on a line. Otherwise, Remark 3.7 shows that there is a good choice of orientations for (e_1, e_2), and a good choice of base point $*$ such that the orbit of $*$ does not meet $Q(e_1, e_2)$; this implies that X_{e_1} does not cross X_{e_2}. $\square$

11 Strong intersection number and asymmetric core

11.1 Asymmetric core

We first introduce an *aymmetric core* (actually two asymmetric cores $\mathcal{A}_1, \mathcal{A}_2$) for two actions of G on simplicial trees. Note that there is no obvious generalisation of $\mathcal{A}_1$ when T_1 is an $\mathbb{R}$-tree.

In what follows, given an action of G on a tree T, we denote by G_x the stabilizer of a point or an edge x of T.

Definition 11.1 (Asymmetric core). *Assume that a group G acts on two simplicial trees T_1, T_2. Assume that each edge stabilizer of T_1 acts non-trivially on T_2.*

Then the left asymmetric core $\mathcal{A}_1(T_1 \times T_2)$ is defined by

$$\mathcal{A}_1 = \bigcup_{x_1 \in T_1} \{x_1\} \times \mathrm{Min}_{T_2}(G_{x_1}).$$

The right asymmetric core $\mathcal{A}_2(T_1 \times T_2)$ is defined symmetrically under symmetrical hypotheses.

Remark 11.2. It is clear that $\mathcal{A}_1$ is the smallest invariant subset of $T_1 \times T_2$ which has non-empty connected p_1-fibers. The fact that each edge stabilizer of T_1 acts non-trivially on T_2 implies that $\mathcal{C}$ is non-empty and that T_1 and T_2 are not refinements of a common simplicial action. In particular, $\mathcal{A}_1$ and $\mathcal{A}_2$ are contained in $\mathcal{C}$ by Proposition 5.2. Moreover, $\mathcal{A}_1$ is contractible since it maps to a tree with contractible fibers.

More generally, if one only assume that each edge or vertex stabilizer of T_1 either acts non-trivially, or has a fix point in T_2, then one can do a similar, but less canonical construction: for each vertex or edge $x_1 \in T_1$ such that G_{x_1} acts non-trivially on T_1, we still impose that $\mathcal{A}_1 \cap p_1^{-1}(x_1) = \{x_1\} \times \mathrm{Min}_{T_2}(G_{x_1})$; for $x_1 \in V(T_1)$ such that G_{x_1} fixes a point in T_2, we choose a fix point x_2 of G_{x_1} in T_2, and define $\mathcal{A}_1$ so that $\mathcal{A}_1 \cap p_1^{-1}(x_1) = \{(x_1, x_2)\}$; For each edge $e_1 \in E(T_1)$ with endpoints a_1, b_1, and such that G_{e_1} is elliptic in T_2, we choose a segment I in $p_1^{-1}(e_1)$ joining a fix point of G_{e_1} in $p_1^{-1}(a_1)$ to a fix point of G_{e_1} in $p_1^{-1}(b_1)$ (since this segment might be oblique, $\mathcal{A}_1$ is not in general a subcomplex of $T_1 \times T_2$). In this more general situation, it remains true that $\mathcal{A}_1$ is contractible, but it depends on choices. Note however that the 2-cells of $\mathcal{A}_1$ are independant of choices since they come from the minimal subtrees (in T_2) of edge stabilizers (in T_1).

11.2 Strong intersection number.

Given two actions of a finitely generated group G on two simplicial trees T_1, T_2 with one orbit of edges, Scott and Swarup give a definition of the strong intersection number, which we can reword as follows. Recall that given an oriented edge $e_i \in T_i$, $\delta(e_i)$ denotes the direction based at the origin of e_i and containing e_i, and that $X_{e_i} = \{g \in G | g.*_i \in \delta(e_i)\}$. Let ∂X_{e_i} be the boundary of X_{e_i} in a Cayley graph C of G with respect to some finite generating set S, i. e.

$$X_{e_i} = \{g \in X_{e_i} | \exists s \in S \cup S^{-1}\, gs \notin X_{e_i}\}.$$

Scott and Swarup say that X_{e_1} *crosses strongly* X_{e_2} if both $\partial X_{e_1} \cap X_{e_2}$ and $\partial X_{e_1} \cap X^*_{e_2}$ project to infinite sets in C/G_{e_2}. This notion does not depend on the choice of S.

Lemma 11.3. *Consider T_1, T_2 two simplicial trees dual to one edge splittings a finitely generated group G. Let e_1, e_2 be two edges in T_1 and T_2 respectively.*

Then X_{e_1} crosses strongly X_{e_2} if and only if G_{e_1} acts non-trivially on T_2 and $e_2 \subset \mathrm{Min}_{T_2}(G_{e_1})$.

Proof. Since the action of G on T_1 induces a decomposition of G as an amalgam or HNN extension, G is generated by elements sending e_1 to an edge having (at least) a common vertex with e_1. Thus, we can choose a finite generating set S consisting of such elements. For this choice of S, one gets $G_{e_1} = \partial X_{e_1}$: any $g \in G_{e_1}$ lies in ∂X_{e_1} because one can choose $s \in S \cup S^{-1}$ sending e_1 into $\delta(e_1)^*$, which implies that $gs \notin X_{e_1}$; for the other inclusion, if $g.e_1 \in \delta(e_1)$ and $gs.e_1 \in \delta(e_1)^*$, since $g.e_1$ and $gs.e_1$ are adjacent, one necessarily gets $g.e_1 = e_1$.

It follows that X_{e_1} crosses strongly X_{e_2} if and only if both $G_{e_1} \cap X_{e_2}$ and $G_{e_1} \cap X^*_{e_2}$ project to infinite sets in C/G_{e_2}. Since there is a natural bijection between C/G_{e_2} and $G.e_2$, this condition is equivalent to the fact that both $G_{e_1}.e_2 \cap \delta(e_2)$ and $G_{e_1}.e_2 \cap \delta(e_2)^*$ are infinite.

This clearly cannot occur if G_{e_1} fixes a point x in T_2: an isometry fixing x cannot send e_2 to the component of $T \setminus \{e_2\}$ which does not contain x. If G_{e_1} does not fix a point in T_2 but every element is elliptic, then G_{e_1} fixes an end ω of T_2, and a similar argument applies: an isometry fixing ω cannot send e_2 to the component of $T \setminus \{e_2\}$ which does not contain ω in its boundary. Finally, if G_{e_1} acts non-trivially on T_2, and if $e_2 \notin \mathrm{Min}_{T_2}(G_{e_1})$, then similarly, no element of G_{e_1} can send e_2 to the component of $T_2 \setminus \{e_2\}$ which does not contain $\mathrm{Min}_{T_2}(G_{e_1})$. Therefore, we proved that if X_{e_1} crosses strongly X_{e_2}, then G_{e_1} acts non-trivially on T_2 and $e_2 \in \mathrm{Min}_{T_2}(G_{e_1})$.

Conversely, assume that $e_2 \in \mathrm{Min}_{T_2}(G_{e_1})$. Then consider an element $h \in G_{e_1}$ whose axis in T_2 contains e_2. Then clearly, $h^{\pm k}.e_2$ meets $\delta(e_2)$ and $\delta(e_2)^*$ infinitely many times. $\square$

As a corollary, we immediately have the following interpretation of the strong intersection number. This generalizes Corollary 3.16 in [SS00] which requires that the strong intersection number coincide with the usual one.

Corollary 11.4. *Consider T_1, T_2 two simplicial trees dual to one edge splittings a finitely generated group G.*

Then Scott and Swarup's (asymmetric) strong intersection number $si(T_1, T_2)$ is the number of two-cells of $\mathcal{A}_1(T_1 \times T_2)/G$. This number can also be computed as the number of G_{e_1}-orbits of edges in $\mathrm{Min}_{T_2}(G_{e_1})$ (where $e_1 \in E(T_1)$ is any edge).

12 Fujiwara and Papasoglu's enclosing groups

Proposition 12.1 ([FP98]). *Assume that G acts minimally on two simplicial trees T_1, T_2, and that for each $i \in \{1, 2\}$,*

- *the stabilizer of each edge of T_i acts non-trivially on the other tree;*
- *G does not split over a subgroup of infinite index of the stabilizer of an edge of T_i.*

Then $\mathcal{C} = \mathcal{A}_1 = \mathcal{A}_2$.

Furthermore, assume that for each edge e_i of T_i, the minimal G_{e_i} invariant subtree of the other tree is a line. Then $\mathcal{C} \setminus V(\mathcal{C})$ is a surface.

Proof. Consider the asymmetric core $\mathcal{A}_1 = \cup_{x_1 \in T_1} \{x_1\} \times \min_{T_2}(G_{x_1})$ defined above. We saw that $\mathcal{A}_1 \subset \mathcal{C}$ and that $\mathcal{A}_1$ is contractible. The vertical fibers of $\mathcal{A}_1$ are connected by definition.

We prove that the horizontal fibers over an edge of T_2 is connected. Assume that for some edge e_2, $F = p_2^{-1}(e_2) \cap \mathcal{A}_1$ is disconnected. First, there is at most one component F which is G_{e_2}-invariant since such a component necessarily contains $\min_{T_1}(G_{e_2}) \times \{e_2\}$. So consider another component $F_0 = K_0 \times \{e_2\}$ of F. The stabilizer H of F_0 has infinite index in G_{e_2} because G_{e_2} acts non-trivially on T_1. Since $\mathcal{A}_1$ is simply connected, and since F_0 locally diconnects $\mathcal{A}_1$ into two components, F_0 disconnects $\mathcal{A}_1$ into two components. This means that there is a tree T_{F_0} dual to $G.F_0$ whose edges consist of connected components of $G.F_0$ and vertices to connected components of $\mathcal{A}_1 \setminus G.F_0$. This gives a splitting of G over H. As soon as we

prove that this splitting is non-trivial, we will get a contradiction showing that the horizontal fiber over e_2 is connected.

Since G is finitely generated, we only need to prove that for every vertex $v \in T_{F_0}$ there is an element $g \in G$ which does not fix v. By equivariance, we can assume that v is an endpoint of the edge F_0 of T_{F_0}. Consider a point $x_1 \in K_0$ and the corresponding an open edge $e = (x_1, e_2)$ in $F_0 = K_o \times \{e_2\}$, and let let $x_2 \in T_2$ be the endpoint of e_2 such that (x_1, x_2) is in the component v of $\mathcal{A}_1 \setminus G.F_0$. Let $g \in G_{x_1}$ whose axis contains e_2 (there exists such an element g by definition of $\mathcal{A}_1$). Up to changing g to its inverse, we can assume that $e_2 \subset [x_2, g.x_2]$. Now the path $\{x_1\} \times [x_2, g.x_2]$ in $\mathcal{A}_1$ defines a path from v to $g.v$ in T_{F_0} which crosses exactly once the edge F_0. This implies that $g.v \neq v$.

We now deduce that the horizontal fiber over a vertex $x_2 \in T_2$ is connected. Take two vertices $a, b \in p_2^{-1}(x_2)$, and consider a piecewise linear path $c : [0,1] \to \mathcal{A}_1$ joining a and b. Let $c_2 = p_2 \circ c$. If c_2 is constant, we are done. Otherwise, consider a connected component $]s,t[$ of $[0,1] \setminus c_2^{-1}(v_2)$. Then $c_2(]s, s+\varepsilon])$ and $c_2([t-\varepsilon, t[)$ are contained in the same edge e_2. Since $p_2^{-1}(e_2)$ is connected, we can connect $c(s+\varepsilon)$ to $c(t-\varepsilon)$ by a path in $p_2^{-1}(e_2)$, and we can push it to $p_2^{-1}(x_2)$ to get a path from $c(s)$ to $c(t)$ in $p_2^{-1}(x_2)$. Replacing $c_{|[s,t]}$ by such a path, and doing this for each connected component of $[0,1] \setminus c_2^{-1}(x_2)$, we get a path in $p_2^{-1}(x_2)$ joining a to b.

Since $\mathcal{A}_1$ is connected and has connected fibers, we get $\mathcal{A}_1 \supset \mathcal{C}$, and $\mathcal{A}_1 = \mathcal{C}$. The symmetric argument shows that $\mathcal{A}_2 = \mathcal{C}$.

It is now easy to prove that $\mathcal{C} \setminus V(\mathcal{C})$ is a surface under the additional hypothesis: the link of each point in a horizontal edge $e_1 \times \{x_2\}$ in $\mathcal{A}_1$ is a circle because $\min_{T_2}(G_{x_1})$ is a line, and the symmetric argument shows that the link of a point in a vertical edge is also a circle. $\square$

References

[BFH97a] M. Bestvina, M. Feighn, and M. Handel. Erratum to: "Laminations, trees, and irreducible automorphisms of free groups" [Geom. Funct. Anal. **7** (1997), no. 2, 215–244; MR 98c:20045]. *Geom. Funct. Anal.*, 7(6):1143, 1997.

[BFH97b] M. Bestvina, M. Feighn, and M. Handel. Laminations, trees, and irreducible automorphisms of free groups. *Geom. Funct. Anal.*, 7(2):215–244, 1997.

[BH92] Mladen Bestvina and Michael Handel. Train tracks and automorphisms of free groups. *Ann. of Math. (2)*, 135(1):1–51, 1992.

[Chi01] Ian Chiswell. *Introduction to Λ-trees*. World Scientific Publishing Co. Inc., River Edge, NJ, 2001.

[CLS] Marc Culler, Gilbert Levitt, and Peter Shalen. Unpublished manuscript.

[FHS83] Michael Freedman, Joel Hass, and Peter Scott. Least area incompressible surfaces in 3-manifolds. *Invent. Math.*, 71(3):609–642, 1983.

[FP98] Koji Fujiwara and Panos Papasoglu. JSJ decomposition of finitely presented groups and complexes of groups. `http://topo.math.u-psud.fr/~papazog/preprints.html`, 1998.

[Lev94] Gilbert Levitt. $\mathbb{R}$-trees and the Bieri-Neumann-Strebel invariant. *Publ. Mat.*, 38(1):195–202, 1994.

[LP97] Gilbert Levitt and Frédéric Paulin. Geometric group actions on trees. *Amer. J. Math.*, 119(1):83–102, 1997.

[Lus] Martin Lustig. A discrete action on the product of two non-simplicial $\mathbb{R}$-trees. Unpublished manuscript.

[Sco98] Peter Scott. The symmetry of intersection numbers in group theory. *Geom. Topol.*, 2:11–29 (electronic), 1998.

[SS00] Peter Scott and Gadde A. Swarup. Splittings of groups and intersection numbers. *Geom. Topol.*, 4:179–218 (electronic), 2000.

[SS03] Peter Scott and Gadde A. Swarup. Regular neighbourhoods and canonical decompositions for groups. *Astérisque*, (289):vi+233, 2003.

Institut Fourier, UMR 5582,
BP74, Université Grenoble 1,
38402 Saint-Martin d'Hères Cédex, France.
e-mail: `vincent.guirardel@ujf-grenoble.fr`